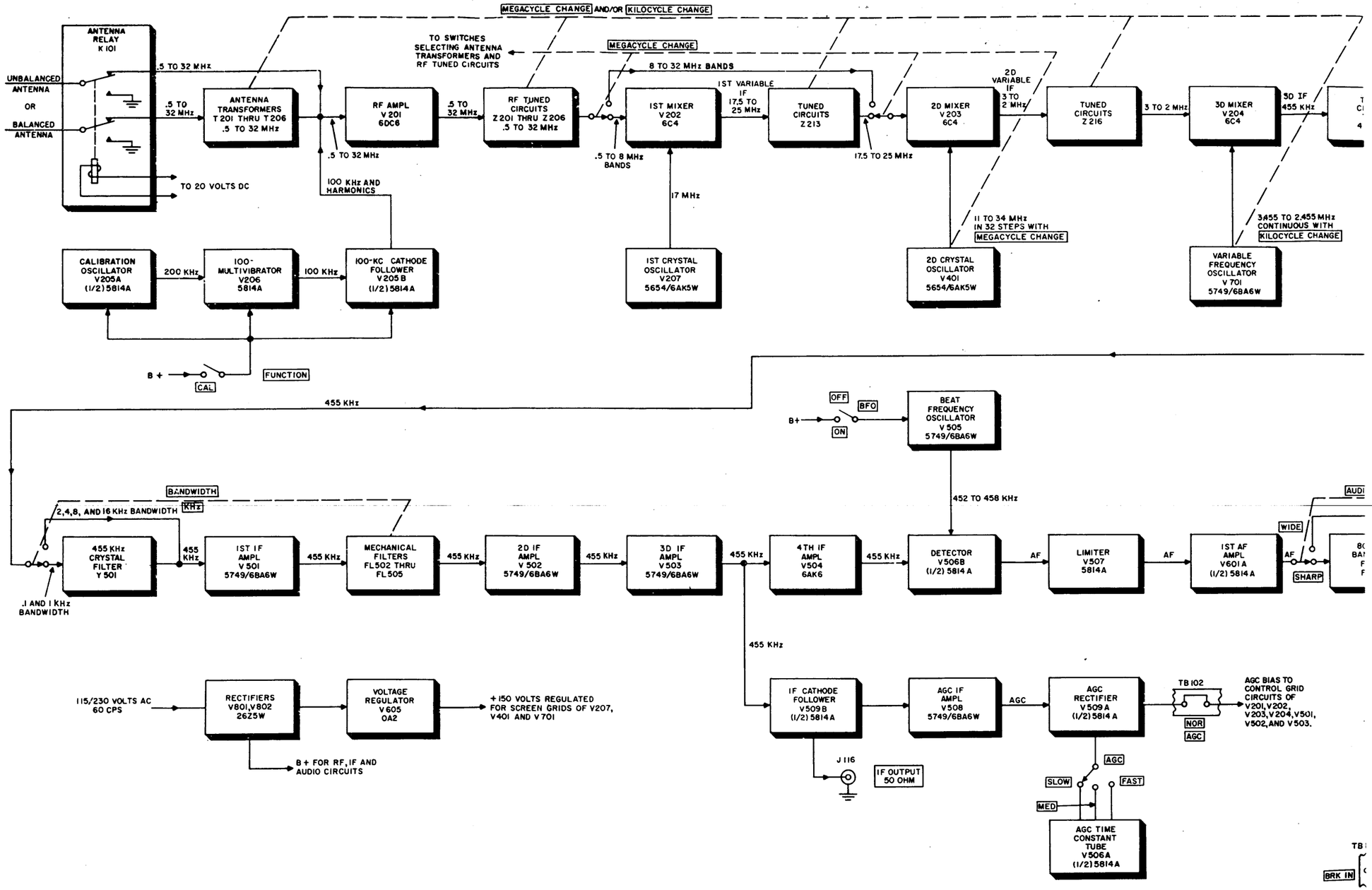
MEGACYCLE CHANGE AND/OR KILOCYCLE CHANGE
ANTENNA RELAY K 101
UNBALANCED ANTENNA
OR
BALANCED ANTENNA
TO 20 VOLTS DC
.5 TO 32 MHz
ANTENNA TRANSFORMERS T 201 THRU T 206 .5 TO 32 MHz
RF AMPL V 201 6DC6
100 KHz AND HARMONICS
TO SWITCHES SELECTING ANTENNA TRANSFORMERS AND RF TUNED CIRCUITS
MEGACYCLE CHANGE
8 TO 32 MHz BANDS
RF TUNED CIRCUITS Z 201 THRU Z 206 .5 TO 32 MHz
.5 TO 8 MHz BANDS
1ST MIXER V 202 6C4
17 MHz
1ST CRYSTAL OSCILLATOR V 207 5654/6AK5W
1ST VARIABLE IF 17.5 TO 25 MHz
TUNED CIRCUITS Z 213
17.5 TO 25 MHz
2D MIXER V 203 6C4
2D VARIABLE IF 3 TO 2 MHz
11 TO 34 MHz IN 32 STEPS WITH MEGACYCLE CHANGE
2D CRYSTAL OSCILLATOR V 401 5654/6AK5W
TUNED CIRCUITS Z 216
3 TO 2 MHz
3D MIXER V 204 6C4
3D IF 455 KHz
3455 TO 2,455 MHz CONTINUOUS WITH KILOCYCLE CHANGE
VARIABLE FREQUENCY OSCILLATOR V 701 5749/6BA6W
CALIBRATION OSCILLATOR V205A (1/2) 5814A
200 KHz
100-MULTIVIBRATOR V206 5814A
100 KHz
100-KC CATHODE FOLLOWER V 205 B (1/2) 5814 A
B +
CAL
FUNCTION
455 KHz
OFF
ON
BFO
BEAT FREQUENCY OSCILLATOR V 505 5749/6BA6W
452 TO 458 KHz
BANDWIDTH
KHz
2,4,8, AND 16 KHz BANDWIDTH
455 KHz CRYSTAL FILTER Y 501
.1 AND 1 KHz BANDWIDTH
455 KHz
1ST IF AMPL V 501 5749/6BA6W
MECHANICAL FILTERS FL502 THRU FL 505
2D IF AMPL V 502 5749/6BA6W
3D IF AMPL V 503 5749/6BA6W
4TH IF AMPL V504 6AK6
DETECTOR V506B (1/2) 5814 A
AF
LIMITER V507 5814A
1ST AF AMPL V601 A (1/2) 5814 A
WIDE
SHARP
115/230 VOLTS AC 60 CPS
RECTIFIERS V801, V802 26Z5W
VOLTAGE REGULATOR V 605 OA2
+150 VOLTS REGULATED FOR SCREEN GRIDS OF V207, V401 AND V701
B+ FOR RF, IF AND AUDIO CIRCUITS
IF CATHODE FOLLOWER V509B (1/2) 5814 A
J 116
IF OUTPUT 50 OHM
AGC IF AMPL V508 5749/6BA6W
AGC
AGC RECTIFIER V509 A (1/2) 5814 A
TB 102
NOR
AGC
AGC BIAS TO CONTROL GRID CIRCUITS OF V201, V202, V203, V204, V501, V502, AND V503.
SLOW
FAST
MED
AGC TIME CONSTANT TUBE V506A (1/2) 5814 A
BRK IN

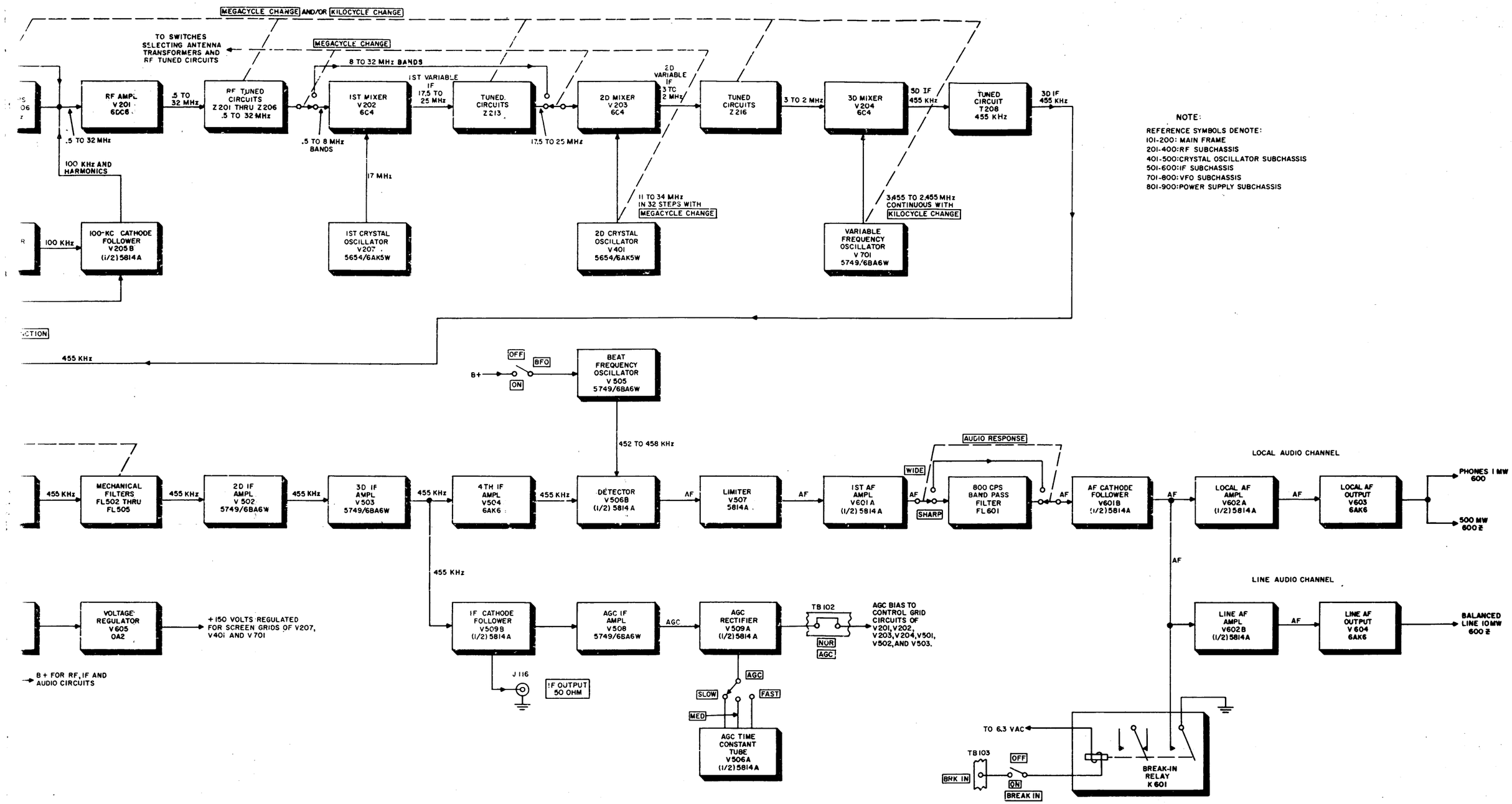

NOTE:

REFERENCE SYMBOLS DENOTE:
101-200: MAIN FRAME
201-400: RF SUBCHASSIS
401-500: CRYSTAL OSCILLATOR SUBCHASSIS
501-600: IF SUBCHASSIS
701-800: VFO SUBCHASSIS
801-900: POWER SUPPLY SUBCHASSIS

50.39

Figure 4-10.—Block Diagram of Radio Receiver, R-390A/URR.