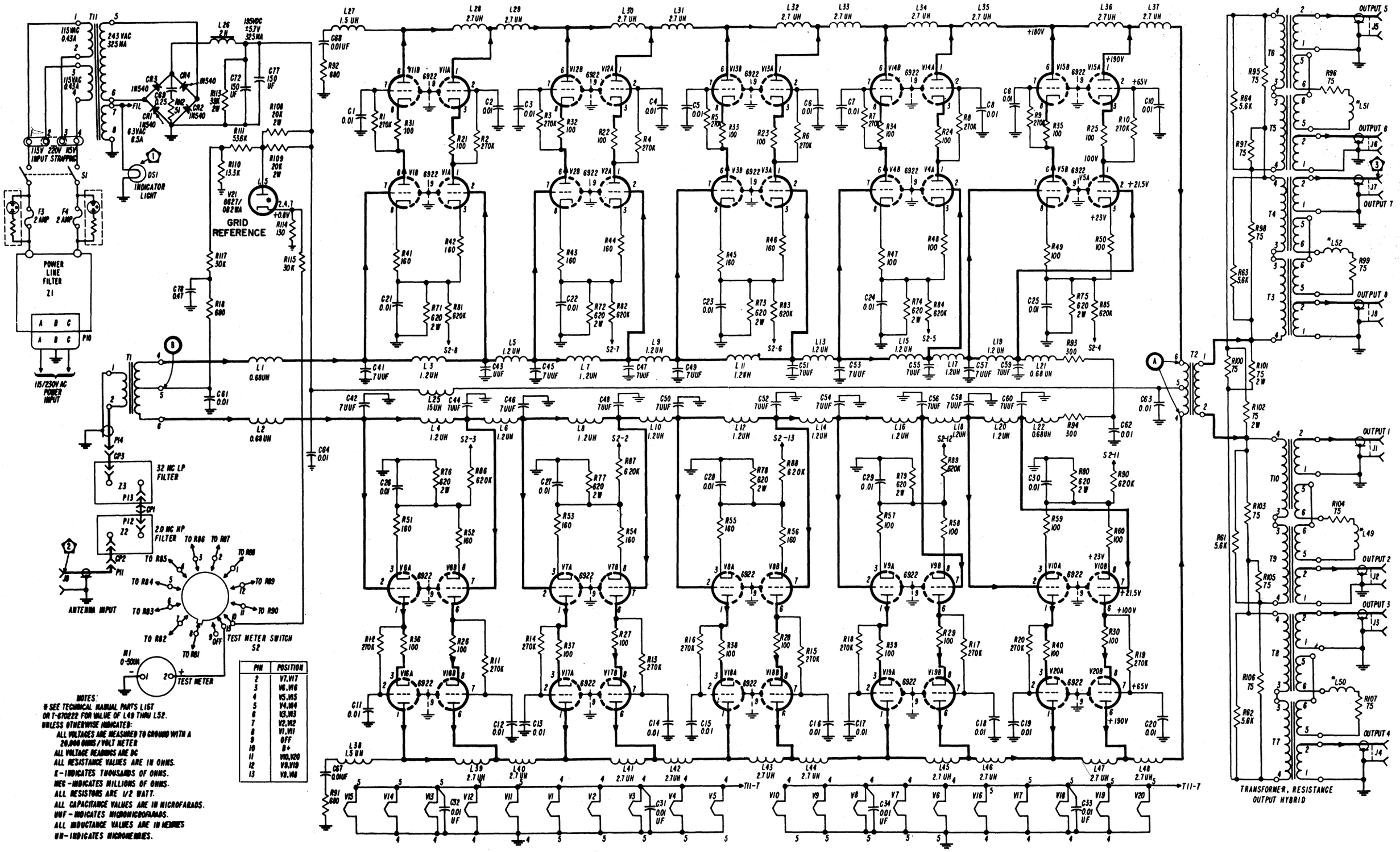

PIN	POSITION
2	V7,V17
3	V6,V16
4	V5,V15
5	V4,V14
6	V3,V13
7	V2,V12
8	V1,V11
9	OFF
10	B+
11	V10,V20
12	V9,V19
13	V8,V18

Figure 6-1. Antenna Coupler CU-656/U, Schematic Diagram