NO.	NOTES
1.	WIRING LEGEND DISTANT TERMINATING AREA. DISTANT TERMINATING DESIGNATION WIRE COLOR CODE R-12-BL
2.	REFER TO 5985WD FOR SCHEMATIC.
3.	CONNECTIONS VIEWED FROM TERMINAL SIDE.
4.	WIRES WHICH HAVE AN * ASTERISK BEFORE THEIR DESIGNATION ARE NOT PART OF CABLE ASSEMBLY 148258.
5A	WIRES WHICH ARE NOT COLOR CODED ARE TO BE BARE NO.20 GA. STRAPPING WIRE 39522RM
6.	WIRES MARKED © ARE NOT PART OF CABLE ASSEMBLY 148277.
7	USE 60336 RM SLEEVING TO INSULATE STRAPPING WIRE WHERE NECESSARY.
8.	USE 148258 CABLE ASSEMBLY.
9	( ) INDICATES TERMINAL DESIGNATIONS FOR REFERENCE ONLY.
10.	FUSE VALUES CORRESPONDING TO FUSE HOLDERS: XF900 — 1.6A XF901 — 2 A XF902 — 1 A XF903 — 1 A XF904 — 1 A XF905 — 3A XF906 — 6A XF907 — 6A XF908 — 1.5A XF909 — 1.6A
11.	WIRE COLOR CODES: WHITE — W BLACK — BK SLATE — S YELLOW — Y BLUE — BL RED — R PURPLE — P ORANGE — O BROWN — BR GREEN — G WHITE BLACK — W-BK WHITE RED — W-R WHITE ORANGE — W-O WHITE GREEN — W-G WHITE YELLOW — W-Y WHITE BLUE — W-BL WHITE PURPLE — W-P
12.	** INDICATES 18AWG WIRE.
5B	WAFER SWITCH STRAPPING 24GA. BARE WIRE RM-39555

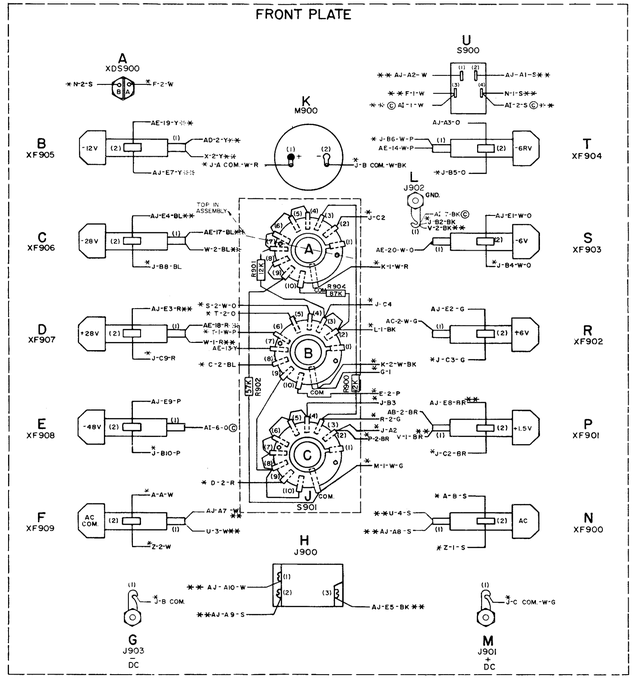

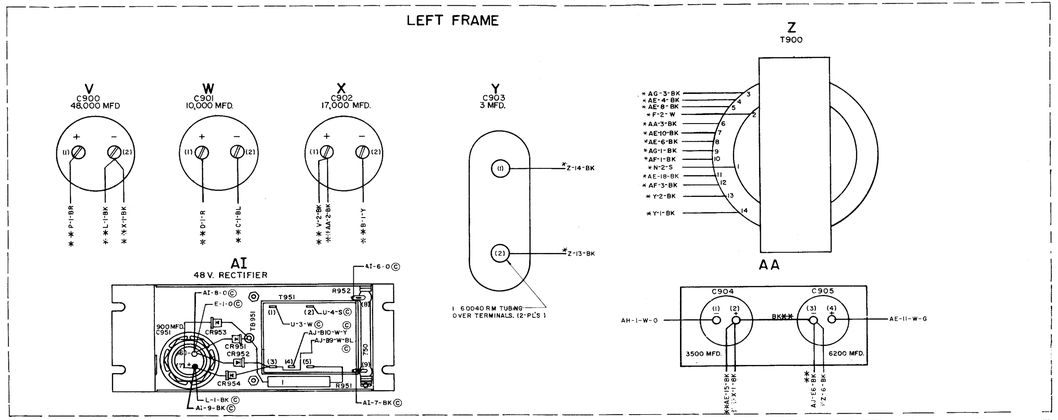

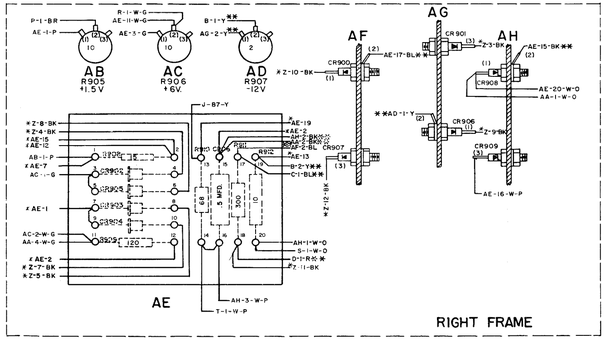

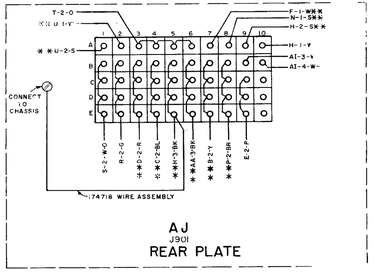

5986WD

REVISION

SYM	DATE	AUTH NO.
A	1-7-63	79830
B	1-7-63	79843
C	1-10-63	84820

ACTUAL WIRING DIAGRAM FOR MULTI-VOLTAGE POWER SUPPLY (ASSEM. NO. 148248)

APPROVALS

D	R	E	M

DRAWN NO. 5986WD.

DATE 1-18-63

PD FILE NO. 1-33,69AA

DRAWN N.A.R. CHKD

ENGD E.J.T. APPD

TELETYPE CORPORATION

5986WD

RTTY ELECTRONICS
TELETYPE=Sales-Service-Parts
PO Box 20101 El Sobrante, Ca.
94820. (510)222-3102
mr_rtty@pacbell.net