NAVELEX 0967-LP-435-1010

TECHNICAL MANUAL

FOR

RADIO SET AN/WSC-1(V)

PUBLISHED BY DIRECTION OF COMMANDER, NAVAL ELECTRONIC SYSTEMS COMMAND

1 MARCH 1972

CROSS-REFERENCE LIST

Refer to the cross-reference listing below. This technical manual includes the following sections covering Radio Set AN/WSC-1(V):

1.	Radio Set AN/WSC-1(V) Description and Principles of Operation	523-0764357
2.	Radio Set AN/WSC-1(V) Installation	523-0764358
3.	Radio Set AN/WSC-1(V) Operation	523-0764018
4.	Radio Set AN/WSC-1(V) Maintenance	523-0764359
5.	Radio Set AN/WSC-1(V) Parts List	523-0764361
6.	Radio Set AN/WSC-1(V) Diagrams	523-0764360
7.	Radio Frequency Amplifier AM-6137/USC	523-0764022
8.	Radio Frequency Amplifier AM-6138/URC	523-0764023
9.	Control-Monitor C-7879/USC	523-0764024
10.	Control-Indicator C-7880/USC	523-0764025
11.	Control-Monitor C- /USC	523-0764026
12.	Signal Data Converter CV-2564/USC	523-0764027
13.	Electrical Frequency Synthesizer O-1522/USC	523-0764028
14.	Power Supply PP-6185/URC	523-0764029
15.	Radio Receiver R-1587/USC	523-0764030

3/4

Military Nomenclature to Commerical Type Cross-Reference

NOMENCLATURE	COLLINS PART NUMBER	COMMERCIAL NAME
Radio Set AN/WSC-1(V)	787-6263-004	RT-104 Radio Set
Radio Frequency Amplifier AM-6137/USC	777-1214-001	648C-2 RF Amplifier
Radio Frequency Amplifier AM-6138/URC	777-1215-002	648B-1 RF Amplifier
Control-Monitor C-7879/USC	777-1205-002	915Q-1 Radio Set Control
Control-Indicator C-7880/USC	777-1204-002	915P-1 Indicator Control
Control-Monitor C- /USC	622-0511-001	915N-4 Amplifier Control
Signal Data Converter CV-2564/USC	777-1208-001	148F-1 Signal Data Converter
Electrical Frequency Synthesizer O-1522/USC	777-1207-001	680U-1 Frequency Synthesizer
Power Supply PP-6185/URC	777-1211-001	638X-2 High Voltage Power Supply
Radio Receiver R-1587/USC	777-1437-001	53M-2 Main Receiver

523-0764356-00151A
1 May 1972

COLLINS

instruction book

Radio Set AN/WSC-1(V) (Collins RT-104)

This instruction book contains:

Section	Title	Part Number	Page
1	AN/WSC-1(V) Description and Principles of Operation	523-0764357	1-1
2	AN/WSC-1(V) Installation	523-0764358	2-1
3	AN/WSC-1(V) Operation	523-0764018	3-1
4	AN/WSC-1(V) Maintenance	523-0764359	4-1
5	AN/WSC-1(V) Parts List	523-0764361	5-1
6	AN/WSC-1(V) Diagrams	523-0764360	6-1
7	AM-6137/USC Description and Principles of Operation	523-0764022	7-1
8	AM-6138/URC Description and Principles of Operation	523-0764023	8-1
9	C-7879/USC Description and Principles of Operation	523-0764024	9-1
10	C-7880/USC Description and Principles of Operation	523-0764025	10-1
11	C- /USC (915N-4) Description and Principles of Operation	523-0764026	11-1
12	CV-2564/USC Description and Principles of Operation	523-0764027	12-1
13	O-1522/USC Description and Principles of Operation	523-0764028	13-1
14	PP-6185/URC Description and Principles of Operation	523-0764029	14-1
15	R-1587/USC Description and Principles of Operation	523-0764030	15-1

Printed in the United States of America

Collins Radio Company | Cedar Rapids, Iowa

introduction

1. TACTICAL SATELLITE COMMUNICATIONS

The Tactical Satellite Communication Program (TSCP or TACSAT system) consists of a variety of earthbound terminals and a multiple-access relay satellite in synchronous earth orbit. All communications between terminals are relayed through the satellite.

The component assemblies are generally of modular construction and use solid-state circuits almost exclusively.

The terminals operate in the uhf range. Transmission occurs in the general range of 300 to 315 MHz, and reception occurs at 240 to 260 MHz.

2. TERMINAL CAPABILITIES

Radio Set AN/WSC-1(V) (Collins RT-104) is a self-contained communication system installed aboard ship. Operating power is supplied by the ship electrical system. The terminal is installed in various configurations using one or two antennas and one to five modems. The single-modem terminal provides full-duplex voice or half-duplex data communication. The multimodem terminal permits full-duplex communication in all modes. Transmitter power is variable to 1 kilowatt. Two antennas may be required to avoid blind spots in the area coverage.

3. INSTRUCTION BOOK

The instruction book is divisible basically into two main parts. The first part, comprising sections 1 through 6, is system oriented and contains information concerning the overall terminal. The second part, beginning with section 7, is black-box oriented and contains information concerning the component assemblies that make up the terminal.

Section 1, description and principles of operation, contains general and descriptive information, technical specifications, and functional theory of operation for the terminal. It describes the purpose of the terminal, lists the equipment supplied, equipment required but not supplied, and supplies a brief physical and electrical description. This section also lists the electrical, physical, and environmental specifications for the terminal. The theory of operation describes the overall function of the terminal.

Section 2, installation, contains information and installation control drawings required for installation of the terminal.

Section 3, operation, contains information required by the operator to operate the terminal.

Each control unit is illustrated and the function of each switch and control is described. Step-by-step procedures allow the operator to activate the terminal, use it in each mode of operation, and deactivate the terminal following its use.

Section 4, maintenance, contains information required to test the terminal, evaluate its operating condition, and isolate operating faults to a replaceable component assembly. Step-by-step procedures describe the system operation test and trouble isolation in the event of system malfunction. Limited repair information is included as required by the maintenance concept applicable to the terminal.

Section 5, parts list, contains information needed to requisition replaceable items.

Section 6, diagrams, contains tables and diagrams applicable to more than one section. This section includes such information as interconnection cabling diagram, from-to wire chart, power distribution, and unit schematics.

Sections 7 through 15 are description and principles of operation sections for major functional component assemblies. These sections do not describe the overall terminal. They are included to supply additional information to give the operator a better understanding of the operation of the component assemblies within the terminal. The information will also help the operator evaluate the operating condition of the assembly and make more accurate judgements during system fault analysis.

Radio Set AN/WSC-1(V) (Collins RT-104)

COLLINS

section 1 description and principles of operation

Printed in USA

523-0764357-001518
1 May 1972

table of contents

Paragraph	Page
1. *General*	1-1
2. *Purpose of Equipment*	1-1
3. *Equipment Supplied*	1-1
4. *Equipment Required But Not Supplied*	1-1
5. *Equipment Specifications*	1-7
5.1 Electrical Specifications	1-7
5.2 Environmental Specifications	1-11
6. *Physical Description*	1-11
7. *Electrical Description*	1-11
8. *Principles of Operation*	1-12
8.1 General	1-12
8.1.1 Frequency Standard	1-13
8.1.2 RF Generation and Translation	1-13
8.1.3 Transmitter Power	1-16
8.2 Operating Modes	1-16
8.2.1 Beacon Acquisition	1-16
8.2.2 Voice Communications	1-19
8.2.3 Data Modes	1-19
8.3 Test Modes	1-20
8.3.1 Voice Loop Test	1-20
8.3.2 Beacon Loop Test	1-21
8.3.3 Data Loop Test	1-21
8.3.4 Multimodem Loop Test	1-21
8.4 Antenna Group Operation	1-22
8.4.1 Azimuth Control and Indication	1-22
8.4.2 Elevation Control and Indication	1-22
8.5 Power Distribution	1-25

List of Effective Pages

*The asterisk indicates pages changed, added, or deleted by the current change.

Page No	Issue
Tab Divider	1 May 72
Title	1 May 72
A	1 May 72
Rec of Rev	1 May 72
1-1 thru 1-17	1 May 72
1-18 Blank	1 May 72
1-19 thru 1-23	1 May 72
1-24 Blank	1 May 72
1-25	1 May 72
1-26 Blank	1 May 72

Record of Revisions

RETAIN THIS RECORD IN THE FRONT OF MANUAL.
ON RECEIPT OF REVISIONS, INSERT REVISED PAGES IN THE MANUAL,
AND ENTER DATE INSERTED AND INITIALS.

ASSIGNED TO (JOB TITLE)

LOCATION

REV. NO.	REVISION DATE	INSERTION DATE	BY	REV. NO.	REVISION DATE	INSERTION DATE	BY
1st Ed	1 May 72						

description and principles of operation

1. GENERAL

This section contains physical and electrical descriptions and presents the general principles of operation for Radio Set AN/WSC-1(V). Radio Set AN/WSC-1(V) consists of a radio set group and an antenna group. The data in this section is based on a typical 5-modem installation aboard a large ship. References are made to other configurations where appropriate.

Separate sections present data on installation, operation, maintenance, parts list, and diagrams for the system. The information in these sections is system oriented, and data on individual units is included only to the extent necessary for clarity and continuity of the main topic. Other sections present data for the individual units.

2. PURPOSE OF EQUIPMENT

The radio set shown in figure 1 is part of a tactical uhf communication network that uses 2-way relay by an earth satellite in synchronous orbit. The terminals provide communications between tactical components of an operational group. Each terminal is capable of 2-way communications, via the satellite relay, with any of the other terminals. The terminal permits communication in FM (analog voice), TTY (teletypewriter), and vocoder (digital voice) modes.

3. EQUIPMENT SUPPLIED

In table 1, numbers in the FIG REF column refer to the figure and index numbers where the item is shown. The list includes only those items supplied by the contractor as integral parts of the terminal. It does not include items that are standard parts of the parent ship, nor does it include government-furnished equipment used with the terminal.

4. EQUIPMENT REQUIRED BUT NOT SUPPLIED

Table 2 lists the equipment required for full utilization of the terminal in its standard configuration but not supplied by the contractor.

Except for the TATS modem and the modem control, the items are part of the ship installation and type designation has to be determined for each ship.

Table 1. Equipment Supplied.

MILITARY NOMENCLATURE	COLLINS NOMENCLATURE	COLLINS PART NUMBER	QTY	FIG REF
Antenna Group OE-81/WSC-1(V), small ship		789-4110-002	1	
Antenna AS-2411/WSC-1(V)	837W-1	787-6129-001	1	7
Control-Antenna C-8221A/WSC-1(V)	916G-1	789-8657-002	1	3-4
Antenna Position Indicator ID-1666/WSC-1(V)	337E-1	789-8658-001	1	4-3
Relay Assembly RE-1025/WSC-1(V)	452X-1	789-8659-001	1	1
Antenna Group OE-82/WSC-1(V), large ship		789-4110-001	1	
Antenna AS-2410/WSC-1(V)	837V-1	787-6128-001	2	6
Control-Antenna C-8221A/WSC-1(V)	916G-1	789-8657-002	1	3-4
Antenna Position Indicator ID-1666/WSC-1(V)	337E-1	789-8658-001	1	4-3
Relay Assembly RE-1025/WSC-1(V)	452X-1	789-8659-001	2	1

Table 1. Equipment Supplied (Cont).

MILITARY NOMENCLATURE	COLLINS NOMENCLATURE	COLLINS PART NUMBER	QTY	FIG REF
Radio Set Group OZ-8(V)/WSC-1(V)		787-6263-004	1	1
Amplifier-Filter AM-6205/WSC-1(V)	648D-1	787-6266-001	2	1
Radio Frequency Amplifier AM-6137/USC	648C-2	777-1214-001	5	2-11, 3-3
Radio Frequency Amplifier AM-6138/URC	648B-1	777-1215-002	1	2-2
Electrical equipment cabinet	Rack 2	775-6576-001	1	3-1
Electrical equipment cabinet	Rack 1	777-1221-001	1	2-1
*Control Case	Control console	775-7423-001	2	4, 5
Control-Monitor C-7879/USC	915Q-1	777-1205-002	1	2-7
Control-Indicator C-7880/USC	915P-1	777-1204-002	1	2-10
Control-Amplifier C-8202A/WSC-1(V)	916F-1	787-6264-002	5	4-1
Control-Bypass C-8818/G	916Y-1	775-7424-001	1	2-8
Control-Monitor C- /USC	915N-4	622-0511-001	1	2-9
Signal Data Converter CV-2564/USC	148F-1	777-1208-001	5	2-3, 3-2
Multiplexer TD-959/WSC-1(V)	572E-1	787-6265-001	1	3-5
Power Supply PP-6185/URC	638X-2	777-1211-001	1	2-12
Radio Receiver R-1587/USC	53M-2	777-1437-001	1	2-6
Electrical Frequency Synthesizer O-1522/USC	680U-1	777-1207-001	2	2-4, 2-5

*One control console may be mounted on top of electrical equipment cabinet no 1.

Table 2. Equipment Required But Not Supplied.

NOMENCLATURE	MANUFACTURER OR MILITARY TYPE	PURPOSE OR FUNCTION IN TERMINAL
Digital Converter CV-2523/UCA-1 (TATS modem, figure 3-6)	Sylvania	Modulates and demodulates FM signals, provides frequency-hopping characteristics for the terminal.
Control-Monitor C-7787/UCA-1 (modem control, figure 4-2)	Sylvania	Controls and monitors operation of the modem unit.
Vocoder		Converts voice signals to digital voice for transmission, converts received digital voice to analog voice.
Handset		Provides audio input and output to vocoder.
Teletypewriter		Generates teletypewriter signals for simultaneous transmission, decodes and prints out received teletypewriter signals.
Reperforator		Repunches tape for later transmission.
Transmitter/distributor		Transmits data from prepunched tape.

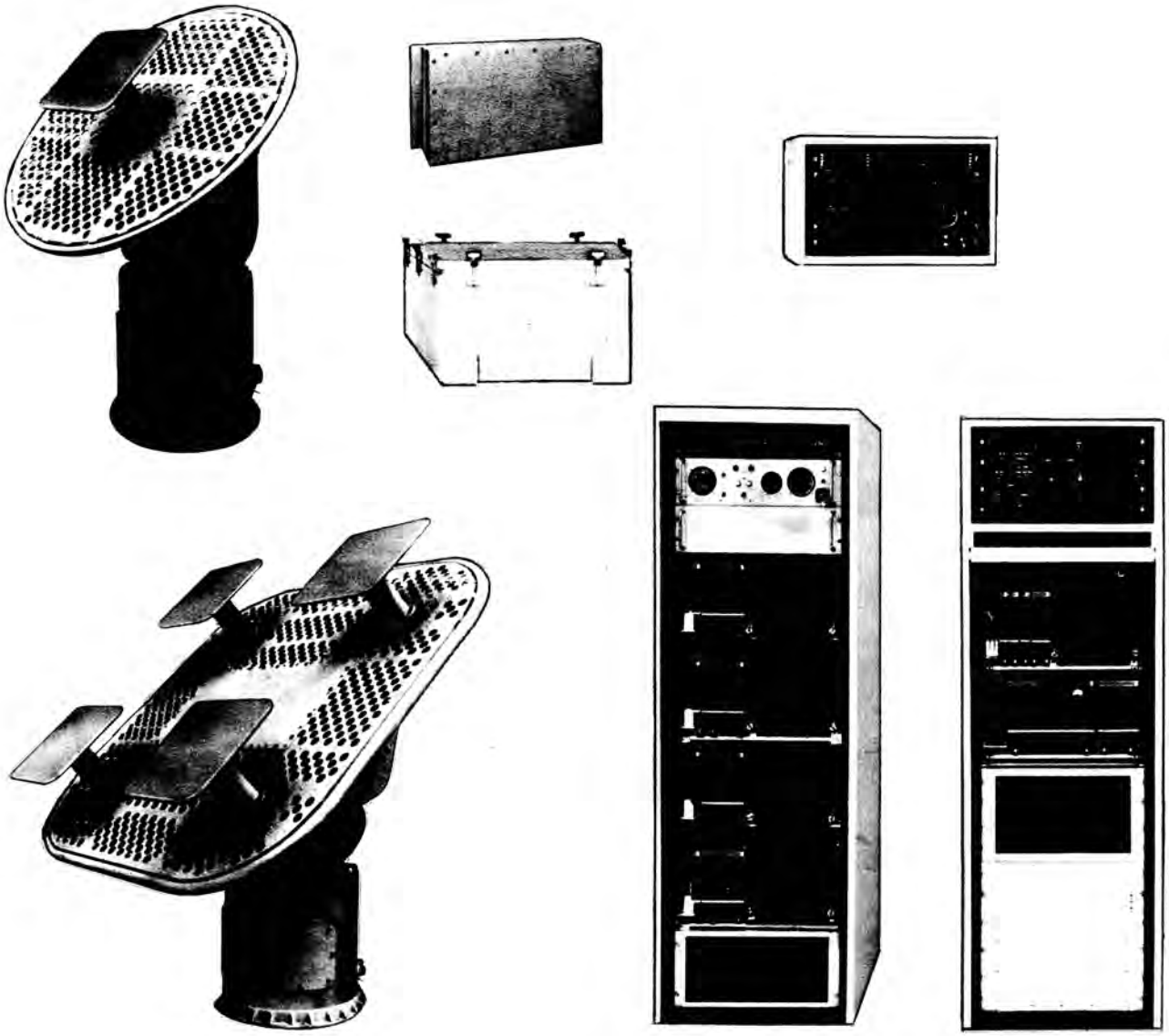

TPI-9691-017

Radio Set AN/WSC-1(V)
Figure 1

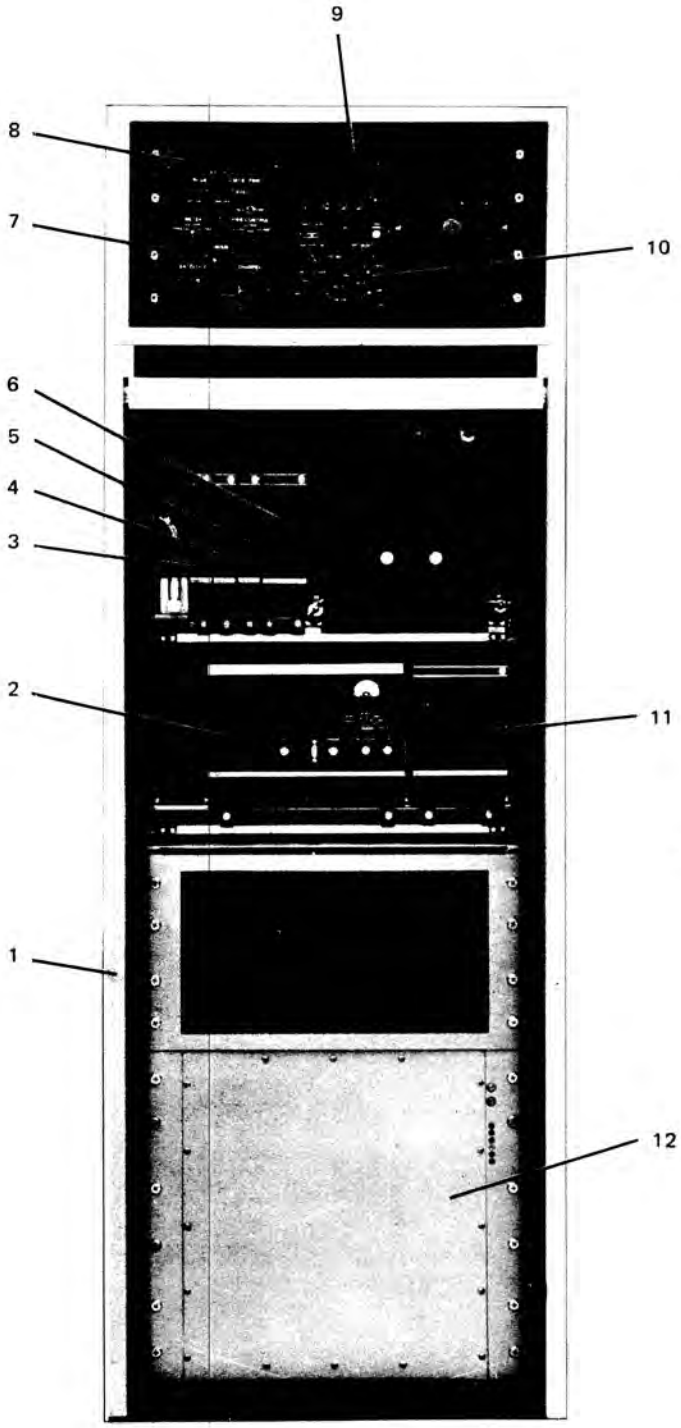

TP3-0051-017

Radio Set AN/WSC-1(V), Rack 1 With Control Case
Figure 2

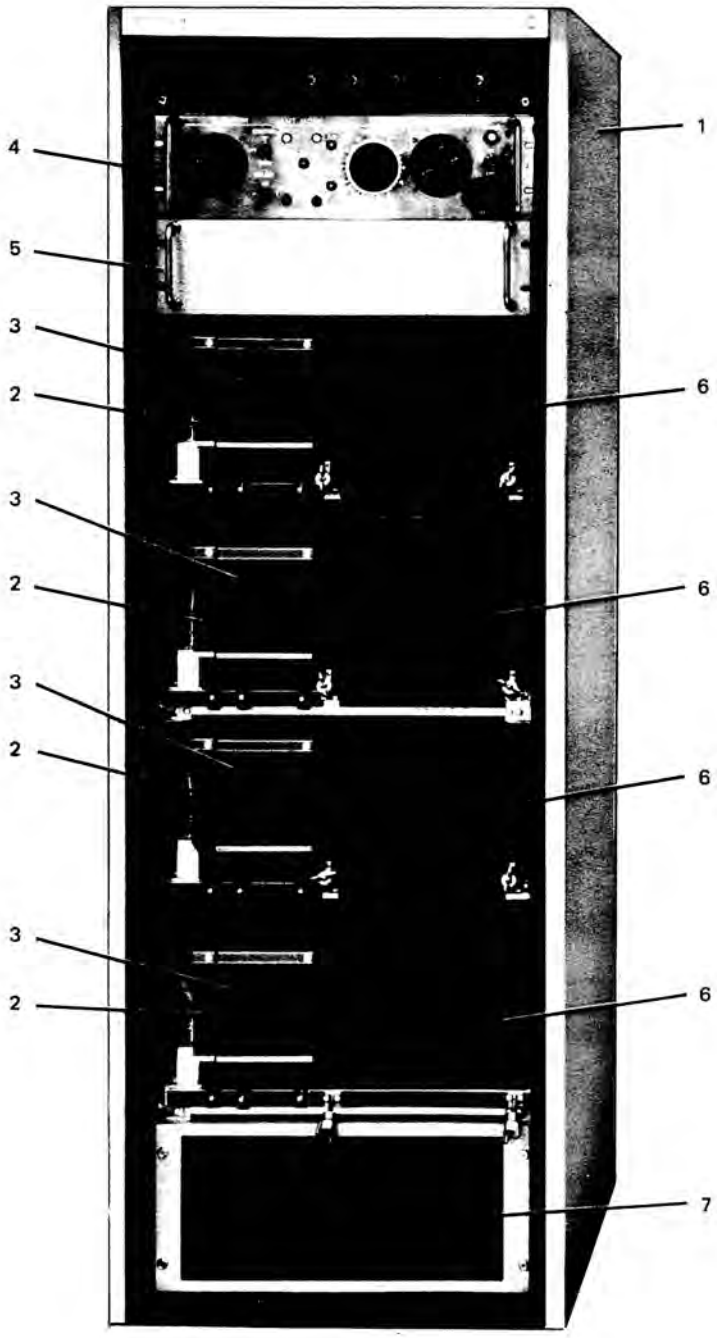

TP3-0052-017

Radio Set AN/WSC-1(V), Rack 2
Figure 3

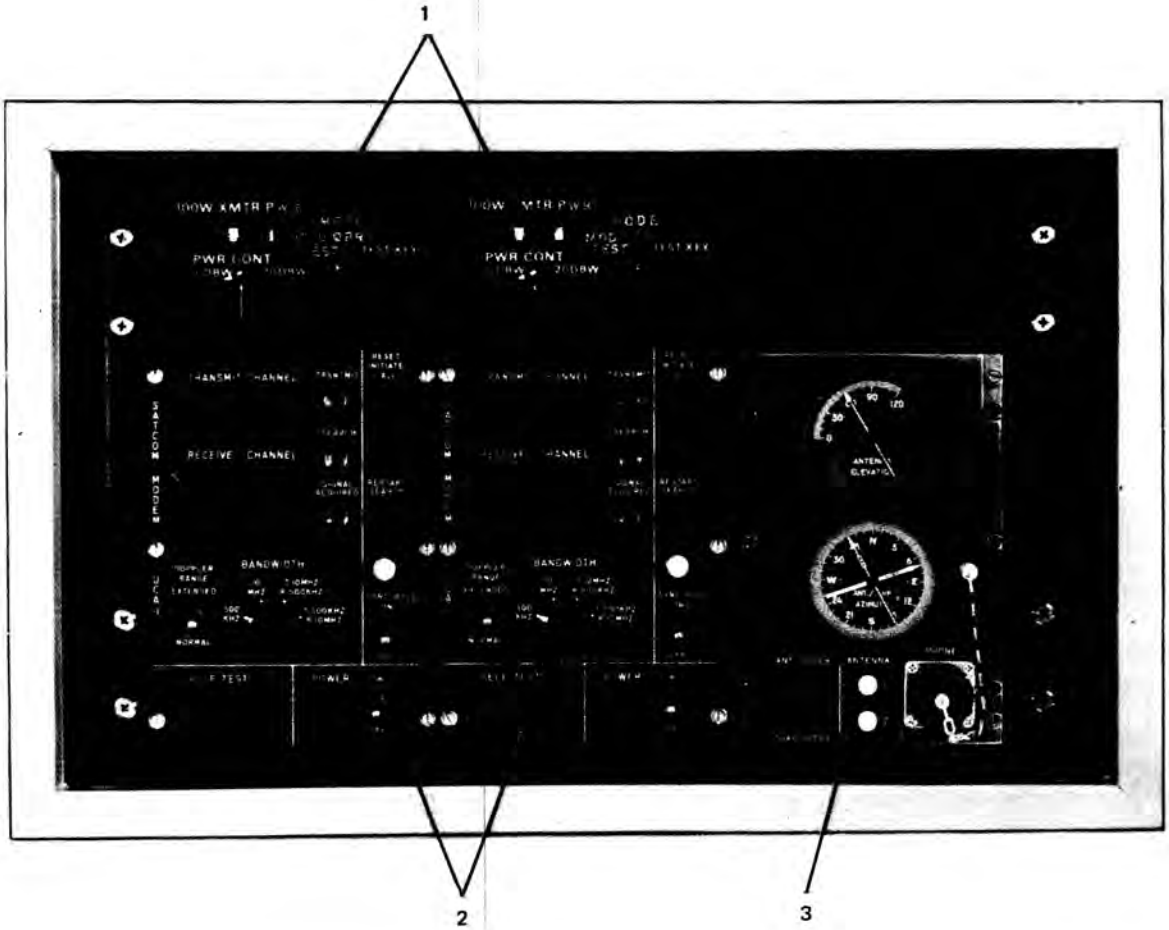

TP3-0053-017

Control Case With Antenna Position Indicator ID-1666/WSC-1(V)
Figure 4

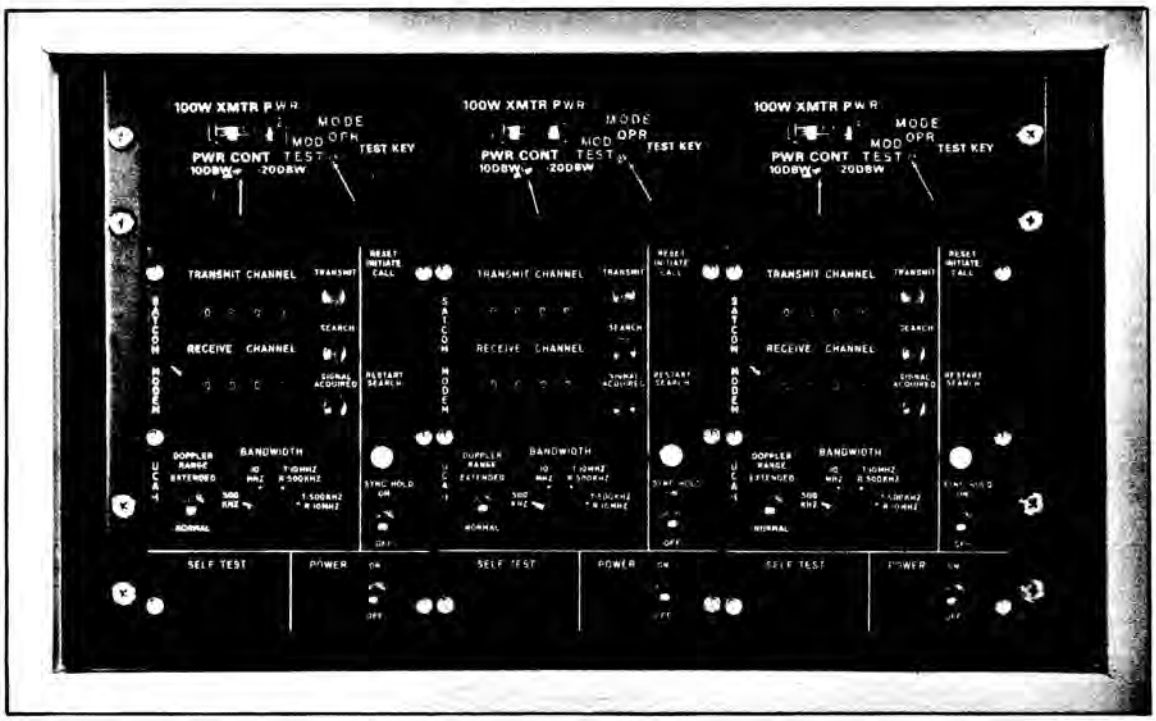

TP3-0054-017

Control Case with 3-Modem Control Units
Figure 5

5. EQUIPMENT SPECIFICATIONS

5.1 Electrical Specifications

General

Power requirements..... 440 ±44.0 volts line to line, 60 ±3.0 Hz, 3-phase, delta connected, 9000 watts.

Transient protection..... Terminal is deactivated when voltage amplitude varies more that ±20 percent or frequency varies more than ±10 percent from nominal values.

Weight (two racks)..... 1,300 pounds.

Frequency range..... Transmit: 302.5 to 312.5 MHz.
Receive: 247.6 to 255.1 MHz.

Number of FM channels..... Three receive bands, each with 11 channels and one beacon channel. Five transmit bands, each with 11 channels.

Frequency stability..... Within 4 parts in 10^8 over a 10-millisecond period and 1 part in 10^7 over a 1-month period.

Duty cycle..... Continuous.

Communication modes..... Analog FM voice, teletypewriter, and digital voice. Full-duplex operation in all modes.

Multimodem capability..... Up to five half-duplex channels of data operation. Two full-duplex channels of data operation are possible.

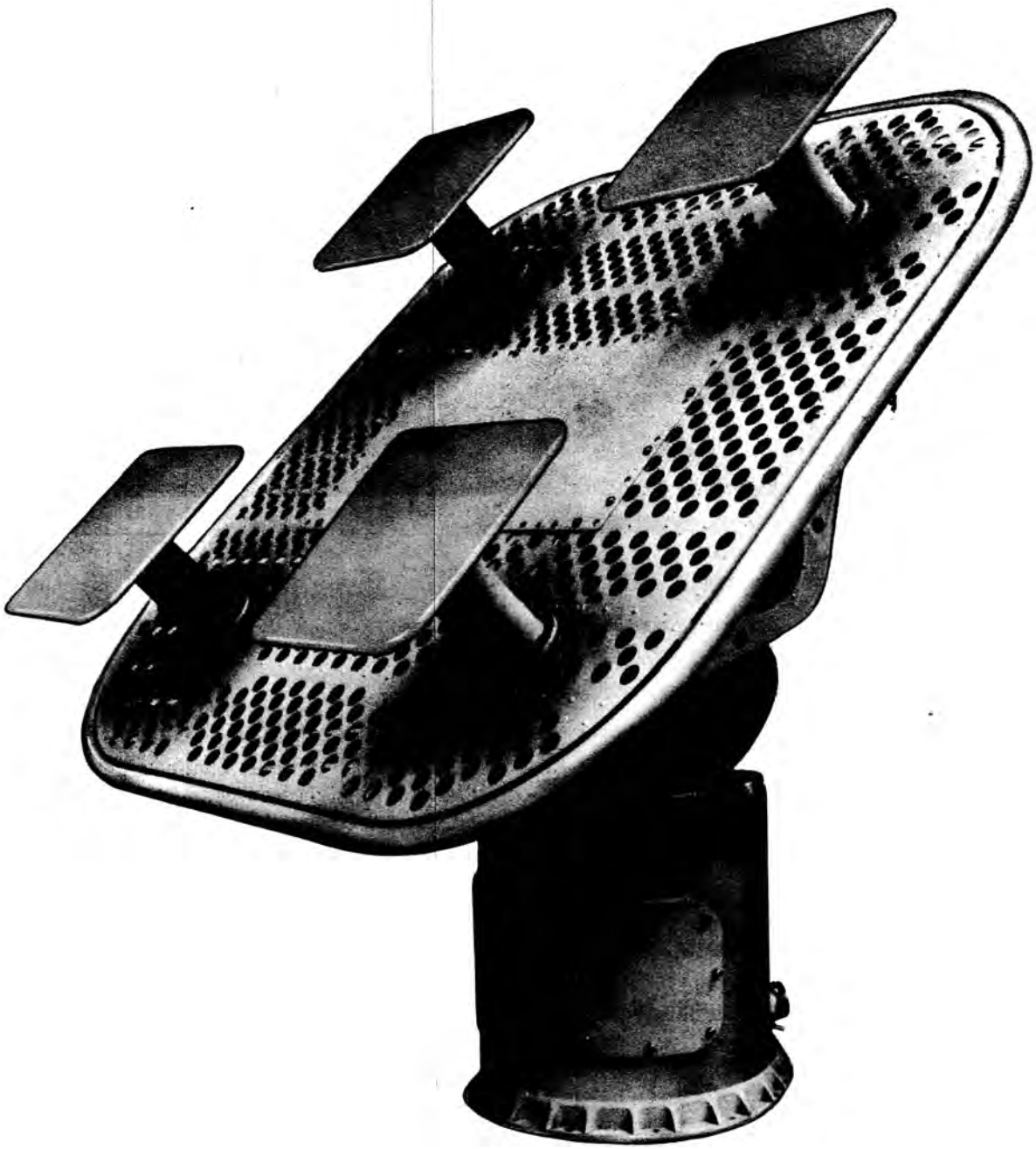

TPI-6175-017

Antenna AS-2410/WSC-1(V)
Figure 6

TPI-6174-017

Antenna AS-2411/WSC-1(V)
Figure 7

Receiving

Channel gain (communication data modes)..... 22.5 to 32.0 dB at downlink frequency.

Intermodulation distortion (at output of preamplifier)..... Third-order products less than -98 dBm for two equal -40-dBm in-band carriers.

Analog FM voice mode snr..... 35 dB with a -120-dBW input.

Noise temperature..... 900 K (referenced to antenna input).

Noise figure..... A function of installation.

Image rejection..... 60 dB.

Rf amplitude response..... Not more than ±0.5 dB in a band 250 kHz either side of the rf channel center frequency.

Rf auxiliary output..... Buffered output with no frequency translation.

Audio output levels (no handset supplied)..... 0 dBm into 600 ohms. Speaker: 0.5 watt.

Transmitting

Phase linearity..... Nonlinearity not more than ±15 degrees for any 500-kHz channel in 10-MHz band, centered at f_u.

Amplitude response at 5 MHz either side of center frequency of uplink band..... 0- to 10-dBW range: ±2.5 dB. 10- to 13-dBW range: ±1 dB. 13- to 20-dBW range: ±0.5 dB. 20- to 30-dBW range: ±1.0 dB.

Audio input..... 0-dBm signal into 600 ohms.

Power output..... At least 1000 watts at full power, continuously adjustable from 1 watt to maximum.

Power indicator accuracy..... Within ±1.3 dB of indication in single-modem operation.

Antenna AS-2410/WSC-1(V) (large ship)

Antenna coverage..... For large/medium ship, two steerable antennas and associated mounts are used. The two antennas are sited so the satellite is always in view of one with minimum overlap of 10 degrees between sectors. Hemispherical coverage from 10 degrees above horizon to zenith.

Frequency band..... 240 to 315 MHz.

Polarization..... The polarization sense (IEEE definition) shall be right-hand circularly polarized for both transmit and receive.

Gain..... The gain of the radiating assembly measured at the input connector is at least 12 dB with respect to a circularly polarized isotropic radiator at a frequency at 305 MHz and greater than 11 dB over the specified frequency range of 240 to 315 MHz.

Vswr..... The vswr measured at the input to the antenna pedestal is 1.5:1 or less across the frequency band 240 to 290 MHz and 1.2:1 or less across the frequency range 290 to 315 MHz.

Antenna
AS-2411/WSC-1(V)
(small ship)

Frequency band..... 240 to 315 MHz.

Pattern coverage..... Hemispherical from 10 degrees above horizon to zenith.

Polarization..... The polarization sense (IEEE definition) shall be right-hand circularly polarized for both transmit and receive.

MAXIMUM ROLL	MIMIMUM GAIN	OPERATING FREQUENCY BAND
±0°	7 dB	240 to 315 MHz
±15°	5 dB	240 to 315 MHz
±35°	1 dB	240 to 315 MHz

The sidelobes shall be 15 dB below the main beam maximum.

Vswr..... The vswr measured at the input to the antenna pedestal will be 1.5:1 or less from 240 to 290 MHz and 1.2:1 or less from 290 to 315 MHz.

5.2 Environmental Specifications

Temperature..... -54 to +55 °C (-65 to +131 °F), continuous sea-level operation.

Relative humidity... 95 percent at +71 °C (+160 °F).

Salt fog..... MIL-STD-810, method 509.

Solution: 5 parts salt, 95 parts water. Continuous exposure for 48 hours at +35 °C (+95 °F).

Vibration..... MIL-STD-167, type I, class I. 0.06-inch da from 5 to 15 Hz; 0.04-inch da from 16 to 25 Hz; 0.02-inch da from 26 to 33 Hz.

Shock..... MIL-STD-901A; hammerblow test.

6. PHYSICAL DESCRIPTION

Radio Set AN/WSC-1(V) consists of a radio set group and an antenna group. It is installed in a variety of configurations of one to five modems in the radio set group. The terminal described in this element is the 2-cabinet, 5-modem, large-ship installation with two antennas.

The electrical equipment cabinets (rack 1 and rack 2 are fabricated of square aluminum tubes connected by cast aluminum corners. This forms the basic rack structure. The modules are mounted on equipment shelves attached at the corners to brackets bolted to the four vertical corner posts. The shelves are easily removed and reinstalled. Crossbars and mounting plates provide means for installing blowers, air ducts, and electrical power circuit components. Electrical interconnection is made through branched cables that can be easily disconnected from the power circuit components and equipment shelves. Sheet-metal panels enclose the rack except for the front, which is left open to provide ready access to the modules for removal and replacement during maintenance.

The basic terminal components are planar modules, shelf mounted in the equipment racks for ease of removal and replacement. The racks may be disassembled and reassembled to permit installation in confined areas. The local control cabinet is mounted on top of equipment rack 1 to conserve space. Terminal power supplies and forced-air blowers are mounted in the bottom of each rack, and a circuit breaker panel is provided at the top of each rack.

7. ELECTRICAL DESCRIPTION

All functional units use solid-state components and integrated circuits. Only one electron tube is used in the basic terminal equipment. This tube is located in Radio Frequency Amplifier AM-6138/URC. A system of filtering and bandpass shaping is used because of the signal

levels, signal characteristics, and frequencies involved. Electrically synthesized frequencies and binary coded decimal (bcd) switching gates provide for instantaneous frequency switching. No mechanical tuner or channeling period is required.

Two frequency synthesizers are used, one for receive operation and one for transmit. This feature, together with the diplexer, permits full-duplex operational capability in voice mode operation. In the data modes, teletypewriter and vocoder, the multimodem configuration permits full-duplex operation. Beacon acquisition is accomplished in a receive mode only; no transmission is required. During beacon acquisition, a signal from a frequency standard in the main receiver is phase compared with the signal received from the beacon, and the frequency standard is adjusted to zero beat with the beacon signal. This provides optimum operation of the terminal with the satellite. A terminal self-test loop operates in a non-radiating mode using a dummy load to dissipate transmitter power.

Transmitter power output level is controllable from 1 watt to 1 kilowatt. A closed-loop automatic level control (ALC) circuit maintains the output power at the selected level. Power output is controlled by setting the bias level in the 100-watt rf amplifier. For power output levels of 100 watts or less in single-modem operation, the 1-kilowatt rf amplifier is bypassed, and the output of the 100-watt rf amplifier is fed to the diplexer. In test mode operation, the output power of the 1-kilowatt rf amplifier is reduced by 3 dB.

Antenna AS-2410/WSC-1(V) and Antenna AS-2411/WSC-1(V) are circularly polarized crossed-dipole type antennas. Antenna AS-2410/WSC-1(V) includes four crossed-dipole elements, a 90-degree hybrid, two combiners, and a dummy load. The antennas are mounted on an antenna pedestal that contains the azimuth and elevation reversible 3-phase, 208-volt, 60-Hz induction motors; two elevation synchro transmitters; three azimuth-controlled differential transmitters; and a switch used to disable the antenna subsystem. The elevation section also contains up-down limit switches, and the azimuth section contains radiation hazard limit switches. Each motor is protected by thermal overload switches. Fail-safe brakes are released when power is applied. External connections are made to the antenna through three connectors and a sound-powered phone jack. Connections to the elevation power and control circuits are made through sliprings.

Control-Antenna C-8221/WSC-1(V) contains eight relays and associated isolation diodes, one control differential transmitter, one 400-Hz stepdown transformer, and five solid-state assemblies. The solid-state assemblies include a synchro repeater unit, two synchro demodulators, a relay control, and a limiter board. Input power to the control unit is 28 Vdc and 115 Vac, 400 Hz. The 115-volt input is stepped down to 26 volts for use in the synchro and indicator circuits.

Antenna Position Indicator ID-1666/WSC-1(V) provides antenna status information at a remote location. The indicator displays the same information as Control-Antenna C-8221/WSC-1(V). The indicators contained in the unit include ANTENNA ELEVATION, ANT./SHIP AZIMUTH, ANT. 1 and 2 mode indicators, ANT. BLOCK, and COAX PRESS indicators. The antenna elevation and azimuth indicators receive input signal voltages from control transmitters located in the antenna pedestals. The remaining indicators receive input signal voltages from circuits in the antenna control unit. A sound-powered phone jack also provides connections to the antenna pedestal and antenna control.

Relay Assembly RE-1025/WSC-1(V) provides power control for the antenna azimuth and elevation drive motors. The assembly contains two reversing power control relays controlled by an up or a down control relay or a clockwise or counterclockwise control relay. The reversing power control relays control the phase of 208-volt, 3-phase drive power to the azimuth and elevation axes motors in response to command signals from the antenna control unit. Input power connections to the unit include 208 Vac, 60 Hz, and 28 Vdc.

8. PRINCIPLES OF OPERATION

8.1 General

The following paragraphs present the principles of operation for the terminal. General information is included on the antenna subsystem, the frequency standard, rf generation and translation, and transmitter power considerations.

Signal flow discussions of beacon acquisition, voice mode operation in receive and transmit conditions, data modes operation, and self-test are also included. Refer to the block diagram (figure 10) during these discussions. For the antenna subsystem discussion, refer to figure 11. For the discussion of power distribution, refer to the power distribution diagrams in section 6. In the general discussions, the effect of multimodem operation is not included. Each modem is matched to a signal data converter and a 100-watt rf amplifier. The modem input (receive) signals are routed through a multiplexer to the appropriate units.

8.1.1 Frequency Standard

A frequency standard in the main receiver supplies the 4 MHz reference and injection frequency used in the frequency converter section of the receiver. In the frequency converter section, frequencies of 20 kHz, 25 kHz, 1 MHz, 4 MHz, 27 MHz, and 56 MHz are developed and phase locked with the basic 4-MHz standard frequency. All of the frequencies have a synchronous relationship and exhibit the same degree of frequency stability. The frequencies are used in the radio set as reference and injection frequencies. The frequency of the standard can be adjusted to make the terminal frequencies compatible with the frequency of the satellite.

8.1.2 RF Generation and Translation

Frequency synthesizers develop injection frequency signals used in receive and transmit conditions of the terminal. Two synthesizers are used, one for receive and one for transmit frequencies. The units are identical and interchangeable; both are required to provide full-duplex operational capability. The frequencies produced by the synthesizers are phase locked to the standard through the 25-kHz reference frequency.

Initial frequency selection is made at the SATELLITE switch on Control-Monitor C-7879/USC. Selection of the satellite band applies a bcd control signal to the frequency synthesizer. The synthesizer then produces an rf signal at a frequency depending on a strapping arrangement in the control. The synthesizer output signal is used in the translation of the terminal transmit and receive frequencies.

Table 3 lists the center frequency of the transmit (up-link or f_u) band, center frequency of the receive (down-link or f_d) band, beacon frequency, and crystal frequency for each position of the SATELLITE switch. Table 4 lists the crystal frequency and the frequency by which the operating frequency is offset from f_u or f_d for each position of the CHANNEL switch. Crystal and offset frequencies in table 4 are the same for transmit and receive conditions of terminal operation.

Table 3. Satellite Band Frequencies.

BAND	TRANSMIT	RECEIVE	BEACON	CRYSTAL
A	303.4 MHz	249.6 MHz	254.10 MHz	5.0000 MHz
B	302.7 MHz	249.1 MHz	254.14 MHz	5.0400 MHz
C	311.5 MHz	253.7 MHz	Not used	Not used
D	307.5 MHz	249.6 MHz	254.10 MHz	Tied to A
E	307.5 MHz	253.7 MHz	Not used	Tied to B

Note

All crystal frequencies are ±500 Hz.

Do not use bands C, D, or E when Radio Frequency Amplifier AM-6138/URC is in use.

Table 4. Channel Frequency Offset.

CHANNEL	CRYSTAL	OFFSET
1	4.7945 MHz	-205.5 kHz
2	4.8015 MHz	-198.5 kHz
3	4.8155 MHz	-184.5 kHz
4	4.8295 MHz	-170.5 kHz
5	4.8435 MHz	-156.5 kHz
6	4.8575 MHz	-142.5 kHz
7	4.8645 MHz	-135.5 kHz
8	4.8785 MHz	-121.5 kHz
9	5.1695 MHz	+169.5 kHz
10	5.1905 MHz	+190.5 kHz
11	5.2055 MHz	+205.5 kHz

Note

All crystal frequencies are ±500 Hz.

On BEACON position of the RCVR CHANNEL selector, the channel oscillator is disabled and the beacon oscillator uses the crystal selected by the SATELLITE switch.

8.1.2.1 Transmit Frequency Generation (Refer to figure 8.)

In data transmit operation, the output frequency of the transmit frequency synthesizer (110.0 to 122.5 MHz) is routed through the multiplexer to the signal data converter. In the converter the synthesizer frequency is doubled and applied to a summing mixer. The other input to the mixer, supplied by the TATS modem, is a modulated signal with a 70-MHz nominal center frequency. The 220- to 245-MHz and the 70-MHz signals are mixed to produce the 290- to 315-MHz transmit frequency. Radio Set AN/WSC-1(V) transmits in the range of 300 to 315 MHz only.) The transmit frequency output of the signal data converter is routed through the 100-watt rf amplifier, multiplexer (for multimodem operation), the 1-kilowatt rf amplifier, and then to the antenna subsystem for transmission.

In voice transmit operation, the frequency synthesizer produces the same rf signal as in data transmit operation. This signal is doubled in the signal data converter and applied to the

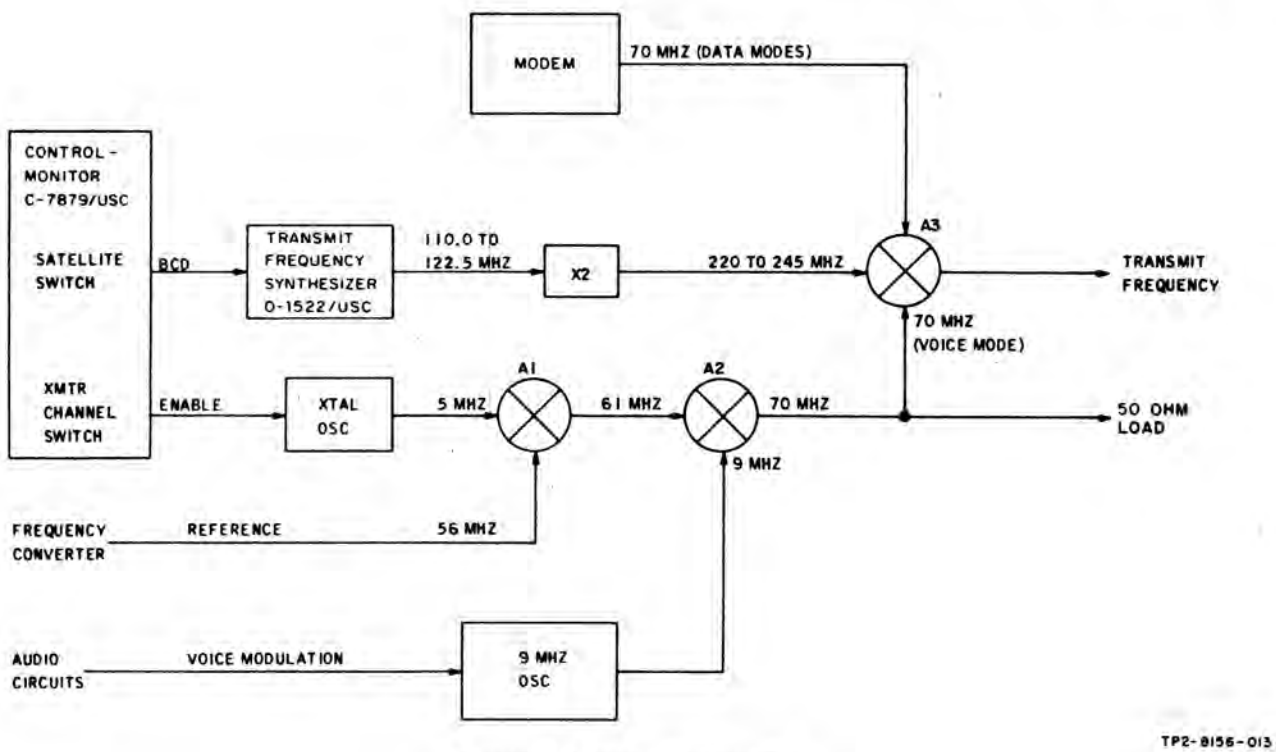

Transmit Frequency Generation
Figure 8

mixer as in data transmission. The 70-MHz signal input to the mixer, however, is derived in a different manner. The XMTR CHANNEL switch at Control-Monitor C-7879/USC selects an enabling ground for the crystal oscillator in the signal data converter. The ground enables 1 of 11 crystals of a crystal oscillator bank. The enabled oscillator signal (at a frequency within the range of 4.795 to 5.205 MHz) is applied to a summing mixer. The other input to the mixer is a 56-MHz reference signal from the main receiver. The mixer output (basically a 61-MHz signal) is applied to another summing mixer. The other input to this mixer comes from the 9-MHz oscillator in the signal data converter. The 9-MHz oscillator signal is voice modulated from the audio circuits of the radio set. The 70-MHz output is also mixed with the 220- to 245-MHz to produce the 290- to 315-MHz transmit frequency as in data transmission.

8.1.2.2 Receive Frequency Translation (Refer to figure 9.)

In data receive operation, the SATELLITE switch position and the strapping arrangement at Control Monitor C-7879/USC determines the control input to the receive frequency synthesizer. The frequency synthesizer produces a frequency within the range of 85 to 95 MHz. The synthesizer output is routed to the main receiver where it is doubled and then applied to a difference mixer. The received rf signal in the frequency range of 240 to 260 MHz is also applied to the mixer. The resultant 70-MHz signal (with the modulation intact) is routed to the modem for demodulation.

In voice or beacon receive operation, the received and translated injection signals follow

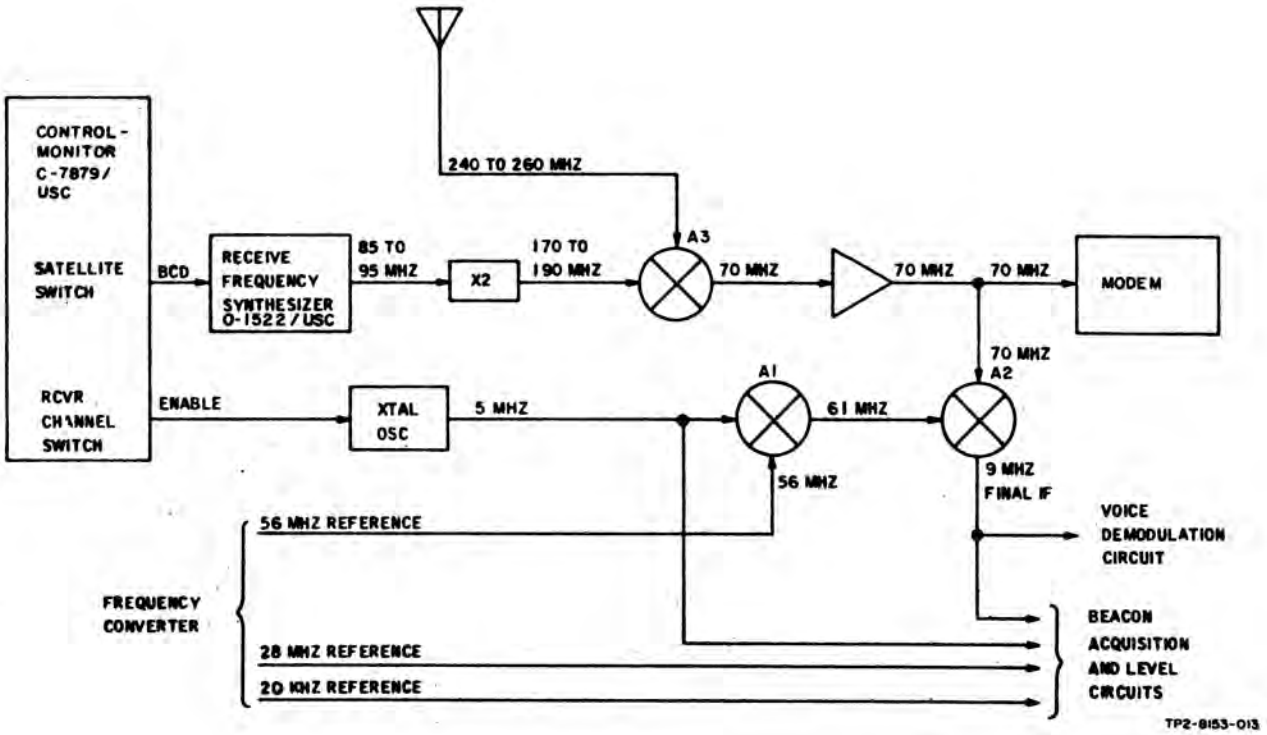

Receive Frequency Translation
Figure 9

the same initial paths as in data receive operation. The 70-MHz signal is fed to a difference mixer. The other input to this mixer is a 61-MHz signal. The position of the RCVR CHANNEL switch on Control-Monitor C-7879/USC selects an enabling ground for the main receiver. The ground enables 1 of 11 crystals of a crystal oscillator bank in the main receiver. The enabled oscillator signal (at a frequency within the range of 4.795 to 5.205 MHz) is applied to a summing mixer. A 56-MHz reference signal from the frequency standard (in the receiver) is also applied to the mixer. The sum frequency, 61 MHz, is then combined with the 70-MHz signal to provide the 9-MHz signal. In voice receive operation, the 9-MHz signal is supplied to a voice demodulator circuit to provide the audio output from the receiver. In beacon operation, the 9-MHz signal is supplied to the beacon acquisition and level circuits to provide the receiver outputs.

8.1.2.3 Crystal Oscillator Bank

The crystal oscillator banks in the signal data converter and in the receiver are identical. Each bank contains provisions for three additional crystals used in translation of beacon frequencies. In the signal data converter the beacon crystals are not used, but in the receiver they are selectively enabled by the position of the SATELLITE switch on Control-Monitor C-7879/USC during beacon mode operation.

8.1.3 Transmitter Power

Transmitter power output is variable from 1 watt to 1 kilowatt. Two rf amplifiers are used, a 100-watt and a 1-kilowatt. Output power level is established by controlling the bias level of the 100-watt amplifier. The bias level controls stage gain and the drive level of the power amplifier chain.

In single-modem operation, power control is obtained by the PWR CONTROL on Control-Monitor C-7879/USC. Power limits are switched in 10-dB steps and a vernier control sets the power level within the selected limits. On the 10- and 20-dBW ranges, the bias limits are switched to produce power outputs of 1 to 10 watts or 10 to 100 watts from Radio Frequency Amplifier AM-6137/USC. The 1000-watt rf amplifier (AM-6138/URC) is bypassed and the output of the 100-watt amplifier is routed to the antenna. The high-voltage power supply (PP-6185/URC) and the 1000-watt rf amplifier are placed in a standby status. On the 30-dBW range, the output level of the 100-watt rf amplifier is the same as on the 20-dBW range, and the high-voltage power supply and 1-kilowatt rf amplifier are enabled. On the 30-dBW range, the power output of Radio Amplifier AM-6137/USC is used to drive Radio Frequency Amplifier AM-6138/URC. An automatic power level control loop maintains the power at the established level.

In multimodem operation, the 100-watt amplifier output level is controlled from Control-Amplifier C-8202/WSC-1(V). Output power is set to the desired level by using the 2-range switch and vernier PWR CONT while observing the 100W XMTR PWR meter. The power output of the 100-watt amplifier is routed through Multiplexer TD-959/WSC-1(V) to the 1-kilowatt amplifier and then to the antenna system.

In test mode operation, the 1-kilowatt amplifier output power is reduced by 3 dB.

8.2 Operating Modes (Refer to figure 10.)

8.2.1 Beacon Acquisition

Beacon acquisition operating mode can be accomplished by selecting the BEACON position on the RCVR CHANNEL switch. In beacon mode, the terminal operates in receive condition only; the transmitter is not used. This mode is used to optimize communications by selecting the antenna that provides better operation, pointing the antenna to the satellite, and synchronizing the terminal frequencies to the frequency of the relay satellite.

The received beacon signal is an rf carrier within a 100-kHz band centered at 254.1 MHz. The frequency may be assigned within any 10-kHz increment of the 100-kHz band. Currently assigned frequencies are listed in table 3. The signal is accepted by the selected antenna, routed through the receive section of the diplexer, down-link filter, and preamplifier, and then applied to the main receiver. In the receiver, the signal is processed through a common channel and translated in two steps to the final intermediate frequency. Frequencies used in the translation are obtained from the receive frequency synthesizer and the receiver. Selection

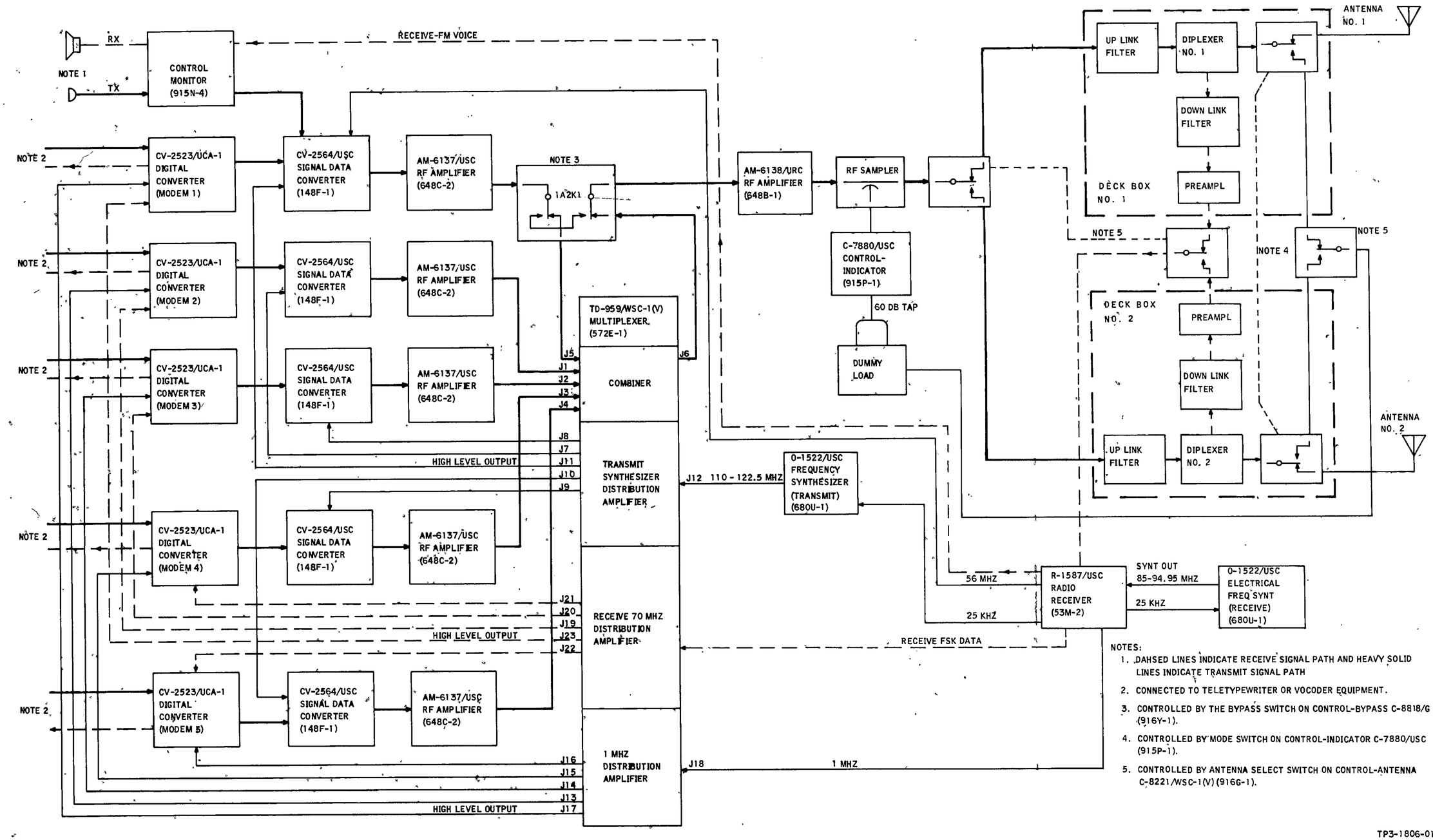

NOTES:

1. DAHSED LINES INDICATE RECEIVE SIGNAL PATH AND HEAVY SOLID LINES INDICATE TRANSMIT SIGNAL PATH
2. CONNECTED TO TELETYPEWRITER OR VOCODER EQUIPMENT.
3. CONTROLLED BY THE BYPASS SWITCH ON CONTROL-BYPASS C-8818/G (916Y-1).
4. CONTROLLED BY MODE SWITCH ON CONTROL-INDICATOR C-7880/USC (915P-1).
5. CONTROLLED BY ANTENNA SELECT SWITCH ON CONTROL-ANTENNA C-8221/WSC-1(V) (916G-1).

TP3-1806-014

Radio Set AN/WSC-1(V), Signal Flow Block Diagram, Figure 10

of frequency options and control of the synthesizing process are wired in (strapped) at Control-Monitor C-7879/USC. Selection of the BEACON position on the RCVR CHANNEL switch routes the injection frequencies.

The signal is then applied to the beacon acquisition and level circuits where it is processed to provide two dc voltages and an audio signal. One dc voltage is the analog of the signal level and is routed to a meter in Control-Monitor C-7879/USC. This signal is used to evaluate the suitability of the beacon signal and the operating condition of the beacon circuits and main receiver. The other dc voltage and the audio signal are analogs of the frequency difference between the beacon signal and the frequency to which the beacon channel is tuned. The terminal frequency standard can then be adjusted to synchronize the terminal to the beacon frequency.

8.2.2 *Voice Communications*

For single modem operation, voice operation is initiated at Control-Monitor C-7879/USC by selecting the VOICE position on the MODE control. For multimodem operation, voice operation is initiated at Control-Monitor C- / USC (915N-4) by placing the SIMUL FM/TATS-TATS to the SIMUL FM/TATS position. During voice operation, the terminal has full-duplex capability. Operation is narrow-band FM using three frequency bands between 240 and 260 MHz for receive and five frequency bands between 300 and 315 MHz for transmit. Each band contains 11 discrete frequency channels, 8 below and 3 above the band center frequency. Communication between one terminal and any other terminal is relayed both ways via the satellite. The terminal is normally in the receive condition.

8.2.2.1 *Receive*

The received signal is a narrow-band FM signal at a channel frequency in the range of 240 to 260 MHz. The signal is accepted by the selected antenna, processed through the antenna subsystem, and fed to the main radio receiver. The signal is translated to 9 MHz and applied to the voice demodulator circuits. The voice demodulator removes the audio frequency modulation and routes it to Control-Monitor C- /USC (915N-4) for processing. It is then fed to the loudspeaker and to the optional earphones. A dc analog of the audio signal level is also routed to a meter circuit in Control-Monitor C-7879/USC.

8.2.2.2 *Transmit*

In voice mode operation, keying the key relay in Control-Monitor C- /USC (915N-4) activates the system key line and the terminal transmits an rf carrier in the frequency range of 300 to 315 MHz. While the system is keyed, applying audio to the audio circuits modulates the carrier in a narrow band.

The input audio signal is first applied to Control-Monitor C- /USC (915N-4) where a sidetone signal is developed and routed to the earphones or speaker. The microphone audio signal is also amplified and routed to the signal data converter for audio processing. The audio signal is used to modulate a 9-MHz oscillator. The modulated rf signal is then translated up to the carrier frequency, processed through the power amplifiers and the diplexer, applied to the antenna, and radiated as a narrow-band FM signal.

8.2.3 *Data Modes*

Radio Set AN/WSC-1(V) is used in configurations containing one to five data circuits. Each data circuit consists of a signal data converter, 100-watt rf amplifier, modem, and controls for the amplifier and modem. Each data transmit circuit has its own modem, signal data converter, and 100-watt rf amplifier. The data transmit signals from the 100-watt amplifiers are processed through a passive combiner and then follow a common path through a 1-kilowatt rf amplifier, antenna select relay, up-link filter, transmit portion of the diplexer, and antenna.

Data receive signals follow a path from the antenna through the receive portion of the diplexer, down-link filter, preamplifier, antenna select relay, and main receiver to a receiver distribution amplifier. The signals are then routed to the data circuit that is coded to receive that signal.

A typical terminal, illustrated by the block diagram (figure 10), has five data circuits. Each

data circuit operates half-duplex. Teletypewriter or vocoder equipment is connected to the data circuits. A 1-MHz reference signal from the frequency standard in the main receiver is fed to a distribution amplifier. This reference signal provides sync for all modems.

8.2.3.1 Receive

In data receive operation, incoming signals are processed in the common receiver path from the antenna to the receive signal distribution amplifier in Multiplexer TD-959/WSC-1(V). The 70-MHz signal appears at all output terminals of the distribution amplifier. Each modem is set for certain operating characteristics (bit rate, frequency-hopping scheme, serial/parallel data, etc). If the incoming signal has characteristics suitable for one of the modems, it is dehopped and fed to the reproducing unit for that data circuit.

8.2.3.2 Transmit

Keying a data circuit simultaneously keys the signal data converter and the rf amplifier(s) in that circuit. The transmit frequency synthesizer output is fed through a distribution amplifier in Multiplexer TD-959/WSC-1(V) to the signal data converters. The keyed converter mixes this injection signal with the 70-MHz modem output to produce the rf output frequency. This low-level signal is raised to a higher level by the keyed, 100-watt rf amplifier. The level is set by the associated 100-watt amplifier control. The signal is routed through the combiner, the 1-kilowatt rf amplifier common transmit signal path, to the antenna.

8.2.3.3 Single-Modem

When the BYPASS control of Control-Bypass C-8818/G is switched to the SINGLE-MODEM position, the terminal can operate full duplex in either data mode by transmitting with the modem in rack 1 (modem 1) and receiving with modems 2 through 5 located in rack 2. Data circuit no 1 remains active and the combiner section of Multiplexer TD-959/WSC-1(V) is bypassed. Power output of the 100-watt rf amplifier is set by the PWR CONTROL switch and potentiometer on Control-Monitor C-7879/USC.

8.3 Test Modes

Test mode operation is initiated by placing Control-Indicator C-7880/USC MODE control to TEST. Selection of the test mode lights the NON OPR lamp on Control-Monitor C-7879/USC and also energizes the antenna relay. The relay switches the final rf output of the diplexer away from the antenna and to the dummy load. All test routines are therefore performed in a non-radiating condition.

Normal test operations are performed in the SINGLE-MODEM position of the BYPASS control of Control-Bypass C-8818/G. The RCVR CHANNEL and XMTR CHANNEL switches of Control-Monitor C-7879/USC must be set to the same channel. The TEST MODE lamp on Control-Indicator C-7880/USC lights to indicate that all test mode switches are properly set. The specific test operation is selected by a TEST SELECT switch on Control-Indicator C-7880/USC. Tests are normally performed on the 30-dBW power range.

In the LAMP position, all the indicator lamps on Control-Indicator C-7880/USC and Control-Monitor C-7879/USC are checked.

In position 1, operation of the receive frequency synthesizer is checked by internal monitoring circuits. A malfunction is signaled by lighting the FAULT lamp on Control-Monitor C-7880/USC.

In position 2, operation of the signal data connector in data circuit no 1 is checked. A malfunction lights the same FAULT lamp.

In position 3, operation of the high-voltage power supply is checked. A malfunction lights the FAULT lamp.

In position 4, operation of the transmit frequency synthesizer is checked. A malfunction lights the FAULT lamp.

The BEACON and MAIN positions are used for system loop tests as described below.

8.3.1 Voice Loop Test

The voice loop test can be performed with the BYPASS switch of Control-Bypass C-8818/G

in the SINGLE-MODEM position. Control-Monitor C-7879/USC MODE switch is set to VOICE position, and Control-Indicator C-7880/USC TEST SELECT switch is placed on MAIN.

A sample of the final rf is picked off by an rf sampler and fed to Control-Indicator C-7880/USC. The transmit frequency is mixed with an internally generated 53.8-MHz signal to produce a signal at the receive frequency. The signal magnitude can be accurately controlled for system evaluation. The receive frequency test signal is fed through a 60-dB coupler, the receive section of the diplexer, several coaxial relays, and the same receive circuits as a received signal.

By voice modulating the output rf signal in the normal manner, the operator can monitor the quality of system performance in the voice loop.

Note

The voice loop test can also be performed with the BYPASS switch of Control-Bypass C-8818/G in the MULTI-MODEM position. In this case, the SIMUL FM/TATS-TATS switch of Control-Monitor 915N-4 must be in the SIMUL FM/TATS position.

8.3.2 Beacon Loop Test

The beacon loop test can be performed with the BYPASS switch on Control-Bypass C-8818/G in the SINGLE-MODEM position. The TEST SELECT switch on Control-Indicator C-7880/USC is set to BEACON, and Control-Monitor C-7879/USC MODE switch is set to TTY.

When the Control-Indicator C-7880/USC TEST position of the MODE control is selected, the modem sends an unmodulated, unhopped 70-MHz signal to the data circuit no 1 signal data converter. This signal is translated to the transmit frequency and applied to Control-Indicator C-7880/USC. The signal then follows the same path as the voice signal to the main receiver. In the main receiver, the beacon acquisition and level circuits are activiated and a dc analog of signal voltage is fed to the radio set control. With the METER switch on Control-Monitor C-7879/USC in the SIG LEVEL position, the RCVR meter indicates this dc analog voltage.

By careful adjustment of the test signal level and selecting system attenuation, the operator can evaluate system operation of the beacon loop.

Note

The beacon loop test can also be performed with the BYPASS switch on Control-Bypass C-8818/G in the MULTI-MODEM position. In this case, use the TEST KEY switch on Control-Amplifier C-8202/WSC-1(V) to key the radio set.

8.3.3 Data Loop Test

The data loop test may be performed in the SINGLE-MODEM position of the BYPASS switch on Control-Bypass C-8818/G. On Control-Indicator C-7880/USC the TEST SELECT switch is set to MAIN, and on Control-Monitor C-7879/USC the MODE control is set to TTY.

Keying the teletypewriter produces a modulated, unhopped 70-MHz signal. The signal is translated and routed as in beacon loop test to the main receiver. In the main receiver, the beacon circuits are disabled.

By carefully adjusting the test signal level and gradually increasing system attenuation, the operator can evaluate system operation of the data loop by observing the error rate, modem sync, etc.

8.3.4 Multimodem Loop Test

Testing of several modems simultaneously can be accomplished in the MULTI-MODEM position of the BYPASS switch on Control-Bypass C-8818/G. All other controls are set as in the single-modem data loop test.

By selective keying, the operator can check the operating condition of various combinations of modems, using the same indications as in the single-modem data loop test. Refer to operation section of the instruction book for details.

8.4 Antenna Group Operation (Refer to figure 11.)

The following paragraphs present the principles of operation for the large ship antenna group. The large ship antenna group includes all circuits of the small ship installation. For the small ship antenna group, the controls associated with the single-antenna system are set to the appropriate position and covered. The principles of operation are discussed at a block diagram level.

8.4.1 Azimuth Control and Indication

The antenna/ship azimuth indicator contains two pointers to indicate ship heading and true antenna azimuth. Ship heading signal voltages, originating at the ship gyrocompass, are fed to the ship heading pointer and to the azimuth control circuit.

The ship gyrocompass signal voltage is fed to antenna control synchro repeater A1. The synchro repeater provides ship heading signal voltage outputs to four paths. Separate synchro transmitters provide isolation for the signal paths. Two outputs are fed through antenna mode and sector switch control circuits to separate control differential transmitters at the antenna in use. A third output is connected to the azimuth control, and the fourth output is connected directly to the ship's heading pointer. The azimuth control output is connected to a control transformer located in each antenna where it is compared to the antenna azimuth position. The control transformer output signal voltage represents the difference between the azimuth control command and the antenna position. This error voltage is connected back to antenna control limiter board A5. The limiter board limits the input error signal to a safe level before feeding the error to demodulators A2 and A3. The demodulators convert the ac error to either a positive or negative dc voltage. The dc error voltage is connected to relay control board A4. When the dc error signal is of sufficient amplitude, the relay control board applies a ground potential to either the clockwise or counterclockwise time delay relay in Relay Assembly RE-1025/WSC-1(V) when AZIMUTH switch S6 is in the AUTO position. The antennas can be manually controlled in azimuth by selecting antenna no 1 or antenna no 2 with switch S6 and selecting CW (clockwise) or CCW (counterclockwise) on AZIMUTH switch S5. The time delay relay activates the reversing power control relay in the relay assembly to apply the correct phase of 208 volts, 3-phase ac to azimuth drive motors in both antennas. When drive power is applied to the motors, the fail-safe brakes are released and the motors rotate the antennas to the position where no error signal exists.

The antenna azimuth axes position the two control differential transmitter rotors to which the ship heading signal voltage had been applied. Each control differential transmitter rotor output signal represents the ship's heading added to the antenna position. The two control differential transmitter rotor output signal voltages are connected through antenna mode and sector switch control circuits to the antenna azimuth pointing indicators in the antenna control and the status indicator units.

The antenna azimuth section contains a radiation hazard switch and sector switches. The hazard switch is operated by an adjustable screw cam and can be set to operate at any position or positions through the 360-degree rotation of the antenna. This causes a relay in the antenna control to operate and break the system rf key line. Switching of antennas with 2-antenna operation is obtained by setting a sector switch cam in each antenna.

The sector coverage desired for each antenna is determined by the particular installation, and the sector switch cams are set to provide rf signal switching to the correct antenna. The antennas rotate together and only the rf signal is switched when the sector switch controls the latching relay in Control-Antenna C-8221/WSC-1(V). The latching relay provides control voltage to operate the coaxial cable rf switches on the bulkhead mounting plate. The rf signal is routed by these rf switches from the terminal to the antenna selected.

8.4.2 Elevation Control and Indication

Either antenna number 1 or antenna number 2 or both antenna elevation axes may be controlled by making the proper switch selection. To control (slew) the antenna elevation axes, press the elevation CONTROL switch UP or DOWN. This

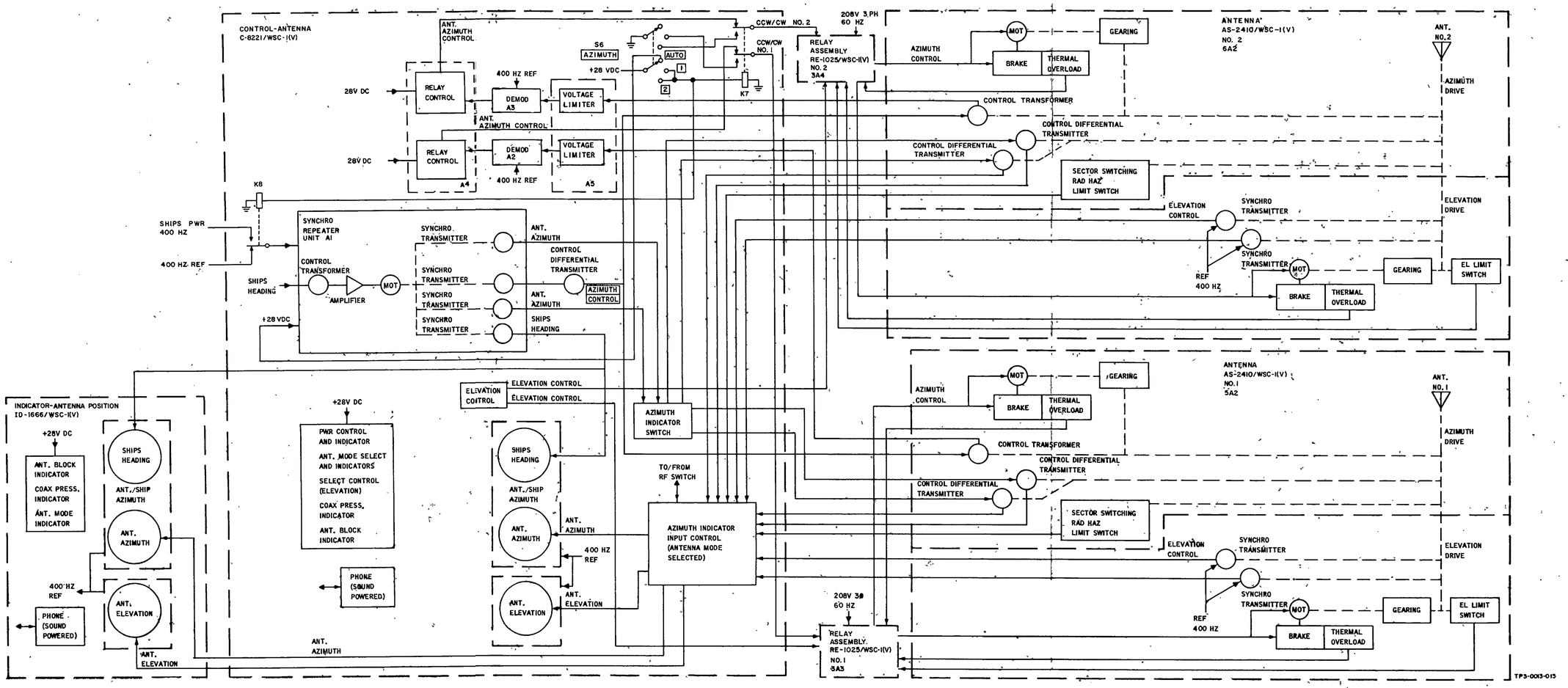

Antenna Subsystem, Block Diagram
Figure 11

applies a ground potential directly to either the up or down time delay in the relay assembly unit. The time delay relay activates the reversing power control relay in the relay assembly to apply the correct phase of 208 volts, 3-phase ac to the elevation drive motor in the selected antenna. When drive power is applied to the motor, the fail-safe brake is released. The antenna continues to run in the direction corresponding to the control switch position until the switch is released or the antenna makes contact with an elevation limit switch. Placing the ELEVATION SELECT switch on 1&2 position permits the two antennas to operate up or down together. It is necessary to place both of the antennas on the same elevation before using the SELECT 1&2 position, or this position can be selected and the CONTROL switch can be held up or down until the limit switch stops both antennas.

The controlled elevation axis positions two synchro transmitters. The two synchro transmitter rotor output signal voltages are connected through antenna mode control circuits to the antenna elevation pointing indicators in the antenna control and status indicator units.

8.5 Power Distribution

Refer to the power distribution diagrams in section 6.

Primary power for the terminal is supplied by the 440-volt, 3-phase, 60-Hz ship power system. The power is applied to both electrical equipment racks. Power protection circuits on rack 1 disable the rack 1 power input lines and provide power-fault indications if the primary power is not within specified limits.

The antenna group receives 208-volt, 3-phase, 60-Hz power from the power transformer in rack 2. Antenna elevation and azimuth motor control circuits are powered by 28 volts dc from rack 1. POWER switch S4 on the antenna pedestal controls the 28 volts dc to the antenna circuits that control the reversing power relays in the Relay Assembly RE-1025/WSC-1(V). Placing S4 to OFF ensures that the antenna cannot be operated when a maintenance is performed and also causes a relay in the antenna control to open the rf key line.