~~506-2082-903-R-391~~

REVISIONS			
SYM	DESCRIPTION	DATE	APPROVAL
A_1	A_1 .1560 $^{+.0001}_{-.0002}$ DIMENSION WAS .1560 $^{+.0006}_{-.0002}$	6 DEC 61	3214-PP-59 REV'D PME
B	FINISH SPEC REVISED	[illegible]	[illegible] REV'D PME
C_1	(1) FINISH WAS COMP FM, COND B PER SPEC AN-S-771	23 MAR 1965	21582-R-61 REV'D PME
D_2	D_1 - REVISED NOTES, D_2 .1560 $^{+.0006}_{-.0002}$ WAS .1560 $^{+.0001}_{-.0002}$	26 MAY 66	6-00189 REV'D

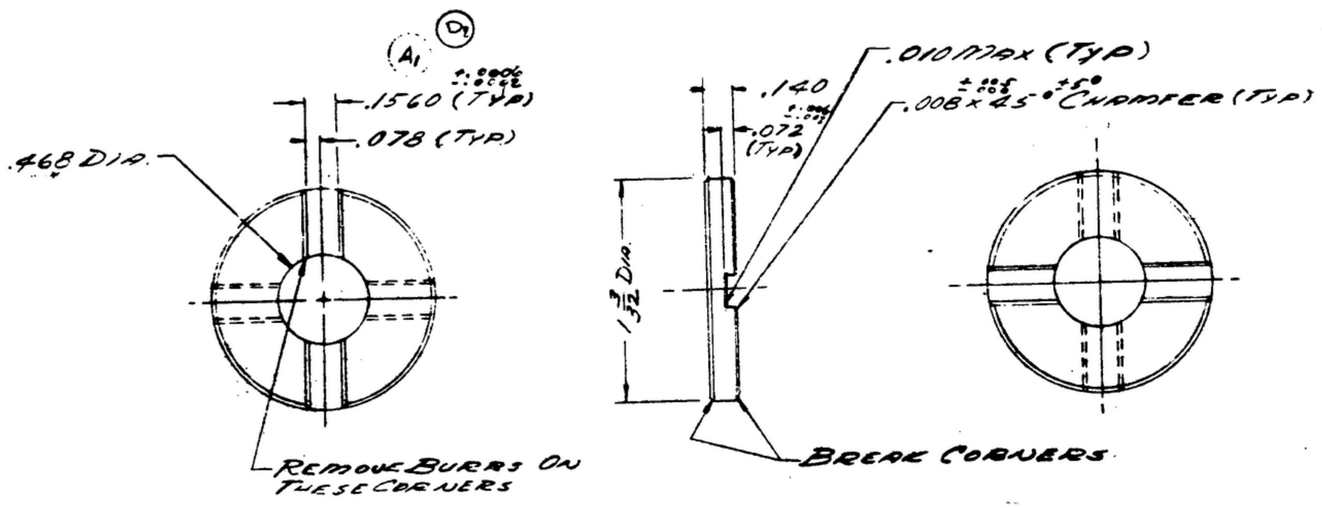

C_1 NOTES:

1. STEEL, COMP 303 S COND B, SURFACE COND (C) PER SPEC MIL-S-7720.

D_1

2. REMOVE ALL BURRS AND SHARP EDGES
3. SURFACE ROUGHNESS NOT TO EXCEED 60 MICRO INCHES
4. FINISH. E300 PER SPEC MIL-F-14072

B

~~E.O. No. 1500 0313~~

LIST OF MATERIAL

SM D-343619	SC DL-248775
SM D-249140	SC-DL-248775
	SC-DL-144500
SM-D-178477	SC-DL-178467
NEXT ASSY	USED ON
APPLICATION	

UNLESS OTHERWISE SPECIFIED
DIMENSIONS ARE IN INCHES
TOLERANCES ON
FRACTIONS ± 1/64 DECIMALS ± .005 ANGLES —

AUTHENTICATION
DRAWN 21882-PH-50-93
TRACED PHOTO
CHECKED [illegible]
VERIFIED PD BR
APPROVED PD BR
REVIEWED PME
DATE 28 JULY 53

GUIDE

SCALE 2/1 SEE NOTE 3

SIGNAL CORPS ENGINEERING LABORATORIES
FORT MONMOUTH NEW JERSEY

SM-C-178492

WHEN REFERRING TO THIS DRAWING STATE DRAWING NO., APPLICABLE ISSUE SYMBOL, IF ANY, AND DATE