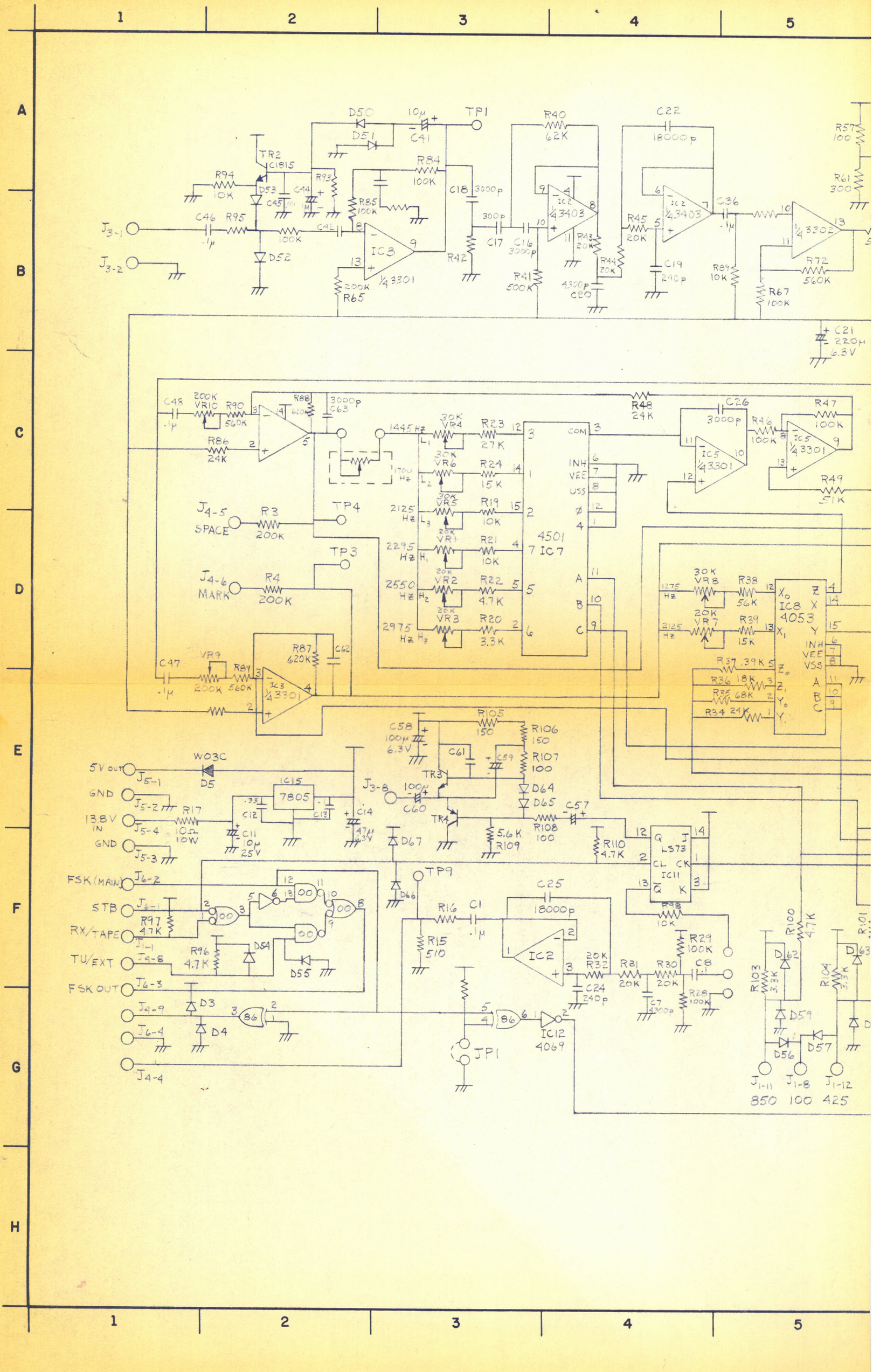
TP1
TR2 C1815
D50
D51
10µ C41
R40 62K
C22 18000p
R57 100
R61 300
R94 10K
D53
C44
R93
R84 100K
C18 3000p
R85 100K
IC3 ¼ 3301
IC2 ¼ 3403
IC2 ¼ 3403
C36 .1µ
¼ 3302
J3-1
J3-2
C46 .1µ
R95
100K
C42
D52
R65 200K
R42
300p
C17
C16 3000p
R41 500K
R43 20K
R44 20K
4300p C20
R45 20K
C19 240p
R89 10K
R72 560K
R67 100K
C21 220µ 6.3V
C48 .1µ
200K VR10
R90 560K
R88 620K
3000p C63
R86 24K
1445 Hz
1700 Hz
30K VR4
30K VR6
30K VR5
20K VR1
20K VR2
20K VR3
R23 27K
R24 15K
R19 10K
R21 10K
R22 4.7K
R20 3.3K
2125 Hz
2295 Hz
2550 Hz
2975 Hz
4501 IC7
COM
INH
VEE
VSS
R48 24K
C26 3000p
R46 100K
IC5 ¼ 3301
R47 100K
R49 51K
J4-5 SPACE
R3 200K
TP4
TP3
J4-6 MARK
R4 200K
C47 .1µ
VR9 200K
R89 560K
R87 620K
C62
IC3 ¼ 3301
1275 Hz
2125 Hz
30K VR8
20K VR7
R38 56K
R39 15K
IC8 4053
R37 39K
R36 18K
R35 68K
R34 24K
INH
VEE
VSS
C58 100µ 6.3V
R105 150
R106 150
R107 100
C61
C59
TR3
TR4
100µ C60
D64
D65
C57
R108 100
5.6K R109
R110 4.7K
5V OUT J5-1
GND J5-2
13.8V IN J5-4
GND J5-3
W03C D5
IC15 7805
C12 .33
C13
C14 47µ 6.3V
R17 10Ω 10W
C11 10µ 25V
J3-8
D67
D66
TP9
LS73 IC11
R98 10K
FSK (MAIN) J6-2
STB J6-1
RX/TAPE J1-1
TU/EXT J4-8
FSK OUT J6-3
J4-9
J6-4
J4-4
R97 4.7K
R96 4.7K
D54
D55
D3
D4
R16
C1 .1µ
C25 18000p
R15 510
IC2
20K R32
R31 20K
R30 20K
C8 .1
C24 240p
C7 4300p
R28 100K
R29 100K
86
86
IC12 4069
JP1
R100 4.7K
R101
R103 3.3K
R104 3.3K
D62
D63
D59
D56
D57
J1-11
J1-8
J1-12
850
100
425

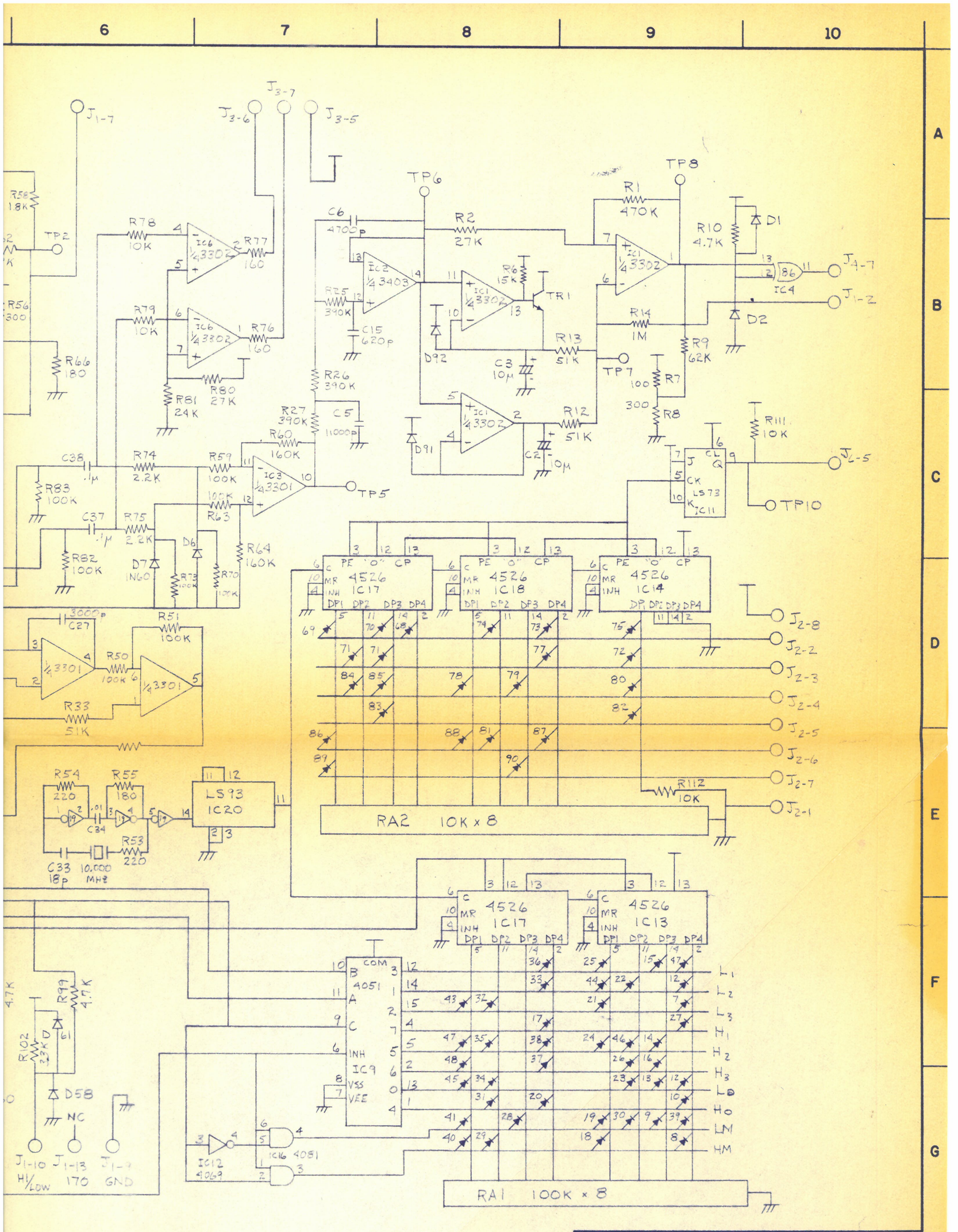


**HAL COMMUNICATIONS CORP.**
BOX 365, URBANA, ILLINOIS 61801

CWR 6850 DEMODULATOR SCHEMATIC

| | |
|---|---|
| DATE 6/2/82 | SCALE |
| DRN BY S. COWAP | No. A1439 |
| APP BY | |